USER MANUAL

ENGLISH

V1.0

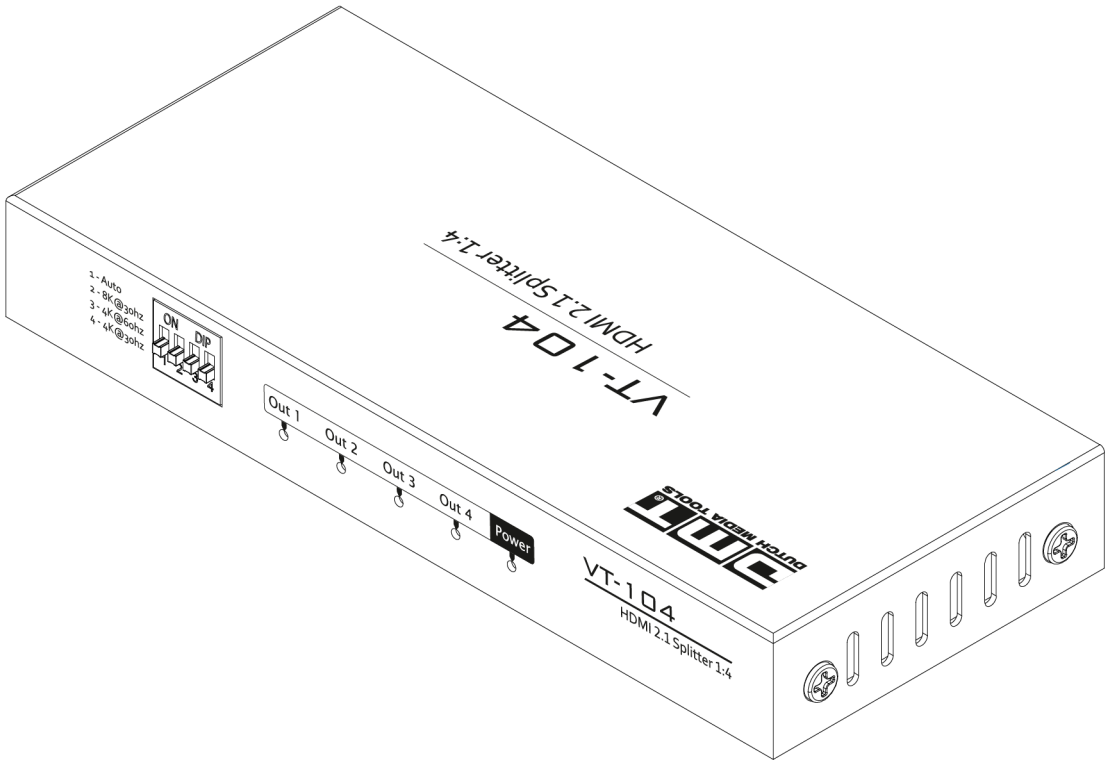

VT 104 - HDMI 2.1 Splitter 1:4

Product code: 101222

Preface

Thank you for purchasing this DMT product.

The purpose of this user manual is to provide instructions for the correct and safe use of this product.

Keep the user manual for future reference as it is an integral part of the product. The user manual shall be stored at an easily accessible location.

This user manual contains information concerning:

- Safety instructions
- Intended and non-intended use of the device
- Installation and operation of the device
- Maintenance procedures
- Troubleshooting
- Transport, storage and disposal of the device

Non-observance of the instructions in this user manual may result in serious injuries and damage of property.

©2026 DMT. All rights reserved.

No part of this document may be copied, published or otherwise reproduced without the prior written consent of Highlite International.

Design and product specifications are subject to change without prior notice.

For the latest version of this document or other language versions, please visit our website www.highlite.com or contact us at service@highlite.com.

Highlite International and its authorized service providers are not liable for any injury, damage, direct or indirect loss, consequential or economic loss or any other loss arising from the use of, or inability to use or reliance on the information contained in this document.

Highlite International B.V. – Vestastraat 2 – 6468 EX Kerkrade – the Netherlands

Table of contents

1. Introduction **3**
1.1. Before Using the Product 3
1.2. Intended Use 3
1.3. Product Lifespan 3
1.4. Text Conventions 3
1.5. Symbols and Signal Words 4
1.6. Symbols on the Information Label 4

2. Safety **5**
2.1. Warnings and Safety Instructions 5
2.2. Requirements for the User 6

3. Description of the Device **7**
3.1. Front View 7
3.2. Back View 7
3.3. Product Specifications 8
3.4. Dimensions 9
3.5. Optional Accessories 9

4. Installation **10**
4.1. Safety Instructions for Installation 10
4.2. Installation Site Requirements 10
4.3. Mounting 10
4.3.1. Mounting Bracket Installation 11
4.3.2. Installation on a Flat Surface 12
Rack Mounting (Optional) **13**
4.4. Connecting to Power Supply 14

5. Setup and Operation **15**
5.1. Warnings and Precautions 15
5.2. Safety Instructions for Operation 15
5.3. Setup Example 15
5.4. Turning ON/OFF 16
5.5. DIP Switch Settings 16
5.6. LED Statuses 16

6. Troubleshooting **17**

7. Maintenance **18**
7.1. Preventive Maintenance 18
7.1.1. Basic Cleaning Instructions 18
7.2. Corrective Maintenance 18

8. Deinstallation, Transportation and Storage **19**

9. Disposal **19**

10. Approval **19**

1. Introduction

1.1. Before Using the Product

Important
Read and follow the instructions in this user manual before installing, operating or servicing this product.

The manufacturer will not accept liability for any resulting damages caused by the non-observance of this manual.

After unpacking, check the contents of the box. If any parts are missing or damaged, contact your Highlite International dealer.

Your shipment includes:

- DMT VT 104 - HDMI 2.1 Splitter 1:4
- USB power adapter with 2 interchangeable plugs (EU, UK) and integrated USB-C cable (0,9 m)
- 2 x mounting bracket
- User manual

Figure 1

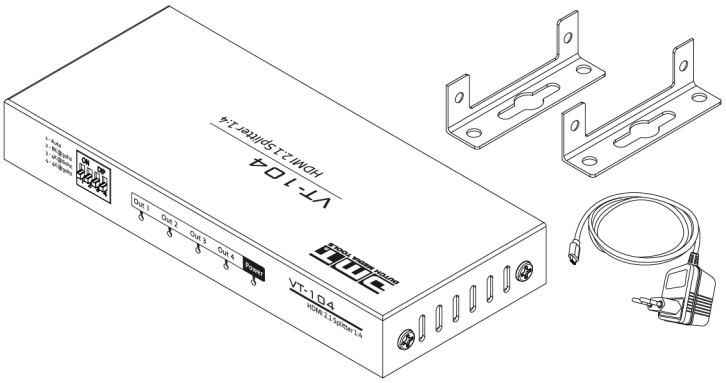

1.2. Intended Use

This device is intended for professional use as an HDMI splitter. It can be installed only indoors. This device is not suitable for households.

Any other use, not mentioned under intended use, is regarded as non-intended and incorrect use.

1.3. Product Lifespan

This device is not designed for permanent operation.

Disconnect the device from the electrical power supply when the device is not in operation. This will reduce wear and improve the lifespan of the device.

1.4. Text Conventions

Throughout the user manual the following text conventions are used:

- References: References to parts of the device are in bold lettering, for example: "turn the **adjustment handle (05)**". References to chapters are hyperlinked
- 0–255: Defines a range of values
- Notes: **Note:** (in bold lettering) is followed by useful information or tips

1.5. Symbols and Signal Words

Safety notes and warnings are indicated throughout the user manual by safety signs.

Always follow the instructions provided in this user manual.



DANGER Indicates an imminently hazardous situation which, if not avoided, will result in death or serious injury.



WARNING Indicates a potentially hazardous situation which, if not avoided, could result in death or serious injury.



CAUTION Indicates a potentially hazardous situation, which, if not avoided, may result in minor or moderate injury.



Attention Indicates important information for the correct operation and use of the product.



Important Read and observe the instructions in this document.



Provides important information about the disposal of this product.

1.6. Symbols on the Information Label

This product is provided with an information label. The information label is located on the side of the device.

The information label contains the following symbols:



This device is designed for indoor use.



This device shall not be treated as household waste.



Read and follow the instructions in the user manual before installing, operating or servicing the device.



The power adapter of this device falls under IEC protection class II.

2. Safety



Important
Read and follow the instructions in this user manual before installing, operating or servicing this product.

The manufacturer will not accept liability for any resulting damages caused by the non-observance of this manual.

2.1. Warnings and Safety Instructions



DANGER
Danger for children

For adult use only. The device must be installed beyond the reach of children.

- Do not leave any parts of the packaging (plastic bags, polystyrene foam, nails, etc.) within the reach of children. Packaging material is a potential source of danger for children.



CAUTION
Risk of fire and injury

This device is delivered with a USB power adapter. Incorrect handling of the USB power adapter may result in injuries and material damage.

The USB power adapter may become very warm during normal use.

- Avoid prolonged contact with the USB power adapter when it is in use.
- Do not cover the USB power adapter with anything when it is plugged into the socket-outlet. This may cause overheating.
- Do not expose the USB power adapter to water or other liquids.
- Disconnect the USB power adapter from the electrical power supply when the USB power adapter is not in use.

Do not use the USB power adapter:

- If it shows signs of overheating, for example the plastic is damaged
- If the AC input pins show signs of corrosion or overheating
- If the USB cable is damaged or shows signs of material fatigue.



Attention
Power supply

Before connecting the USB power adapter to the power supply, make sure that the current, voltage and frequency match the input voltage, current and frequency specified on the information label on the USB power adapter.



Attention
General safety

- Do not block the ventilation openings. Without proper heat dissipation and air circulation, the internal components may overheat. This can result in product damage.
- Do not shake the device. Avoid brute force when installing or operating the device.
- If the device is dropped or struck, disconnect the device from the electrical power supply immediately.
- If the device is exposed to extreme temperature variations (e.g. after transportation), do not switch it on immediately. Let the device reach room temperature before switching it on, otherwise it may be damaged by the formed condensation.
- If the device fails to work properly, discontinue use immediately.



Attention
For professional use only
This device must be used only for the purposes it is designed for.

This device is designed to be used as an HDMI splitter. Any incorrect use may lead to hazardous situations and result in injuries and material damage.

- This device is not suitable for households.
- This device does not contain user-serviceable parts. Unauthorized modifications to the device will render the warranty void. Such modifications may result in injuries and material damage.



Attention
Before each use, examine the device visually for any defects.

Make sure that:

- All screws used for installing the device or parts of the device are tightly fastened and are not corroded.
- There are no deformations on housings, fixings and installation points.
- The power cables are not damaged and do not show any material fatigue.



Attention
Do not expose the device to conditions that exceed the rated IP class conditions.

This device is IP20 rated. IP (Ingress Protection) 20 class provides protection against solid objects greater than 12 mm, such as fingers, and no protection against harmful ingress of water.

2.2. Requirements for the User

This product may be used by ordinary persons. Maintenance may be carried out by ordinary persons. Installation and service shall be carried out only by instructed or skilled persons. Contact your Highlite International dealer for more information.

Instructed persons have been instructed and trained by a skilled person, or are supervised by a skilled person, for specific tasks and work activities associated with the installation, service and maintenance of this product, so that they can identify risks and take precautions to avoid them.

Skilled persons have training or experience, which enables them to recognize risks and avoid hazards associated with the installation, service and maintenance of this product.

Ordinary persons are all persons other than instructed persons and skilled persons. Ordinary persons include not only users of the product but also any other persons that may have access to the device or who may be in the vicinity of the device.

3. Description of the Device

The DMT VT 104 - HDMI 2.1 Splitter 1:4 is a professional HDMI 2.1 splitter designed to distribute 1 high resolution HDMI signal to up to 4 outputs simultaneously. Supporting resolutions of up to 7680 x 4320 @ 60 Hz (8K), it is ideal for applications requiring crystal clear visuals across multiple displays, such as digital signage, control rooms, presentations, and multi screen installations. The VT104 is fully EDID compatible, ensuring reliable communication between source and displays.

Its robust black housing ensures durability, while the rear mounted USB-C power input keeps cable management clean and organised. Power and signal indicators provide direct visual status feedback during operation. Included are a power supply with an integrated USB-C cable and interchangeable EU/UK plugs, as well as 2 mounting brackets.

3.1. Front View

Figure 2

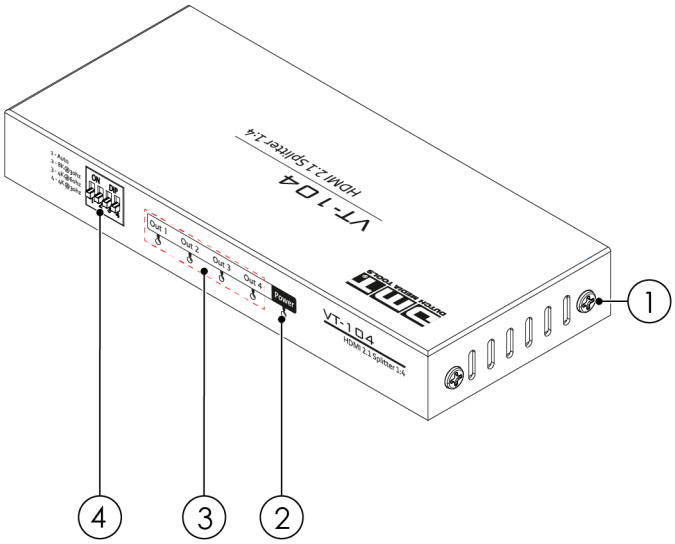

01) 4 x screw for mounting bracket
02) Power LED indicator
03) 4 x output LED indicator
04) DIP switch (with 4 switches)

3.2. Back View

Figure 3

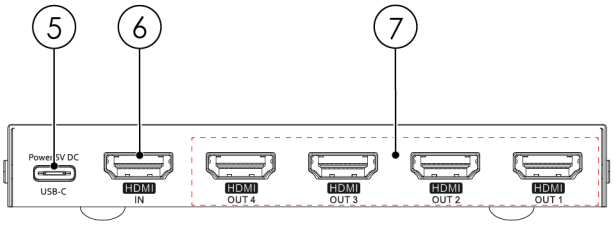

05) USB-C power connector IN (5 V DC)
06) HDMI connector IN
07) 4 x HDMI connector OUT

3.3. Product Specifications

Model:	VT 104 - HDMI 2.1 Splitter 1:4

Control and Programming:	
Maximum input resolution	7680 x 4320
Maximum output resolution	7680 x 4320

Electrical Specifications and Connections:	
Power supply	5 V DC
Power consumption	5 W
Power connector IN	USB-C

Power Adapter:	
Adapter type	AC-DC adapter
Input voltage	100–240 V AC, 50/60 Hz
Input current	0,6 A
Output voltage DC	5 V DC
Output current DC	2 A

Mechanical Specifications:	
Length (including handles)	157 mm
Length (without handles)	134 mm
Width	58 mm
Height	19 mm
Weight	0,21 kg
IP rating	IP20 (indoor use only)
Housing	Metal
Color	Black

Thermal Specifications:	
Maximum ambient temperature	45 °C
Minimum ambient temperature	0 °C

Included Items:	
Included	USB adapter

Outputs:	
Type of output connector	HDMI 2.1
Number of output connectors	4

Inputs:	
Type of input connector	HDMI 2.1
Number of input connectors	1

3.4. Dimensions

Figure 4

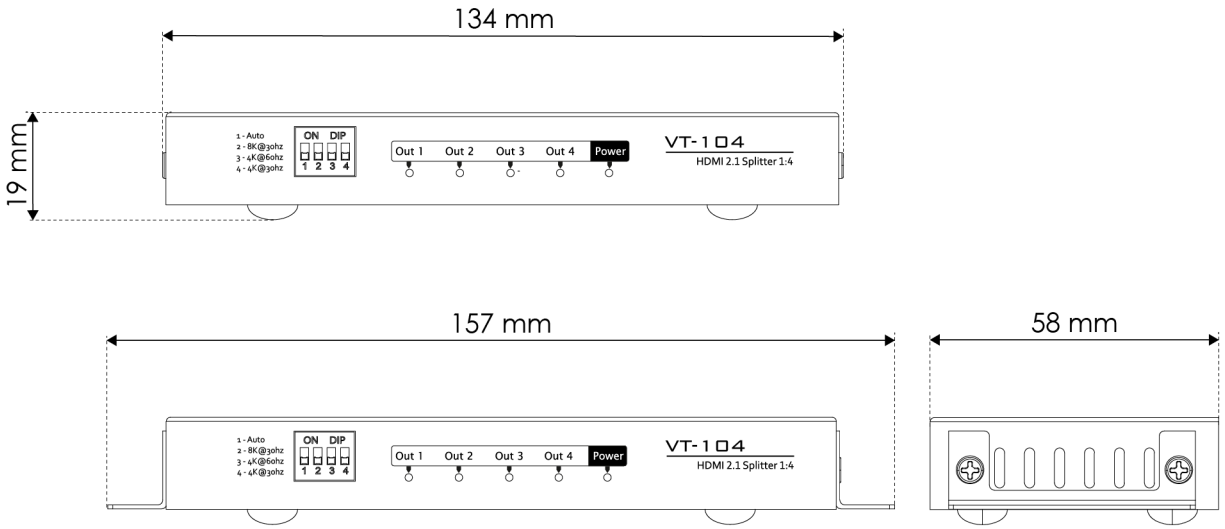

3.5. Optional Accessories

You can additionally purchase the following accessory:

- 101223 19 inch Rackmount kit for VT104 HDMI splitter

Contact your Highlite International dealer for more information.

4. Installation

4.1. Safety Instructions for Installation



Attention
Make sure that there is enough space for ventilation around the device.

- Do not block the ventilation openings. Without proper heat dissipation and air circulation, the internal components may overheat. This can result in product damage.
- Do not install near equipment that produces heat, for example amplifiers.

4.2. Installation Site Requirements

- The device can be used only indoors.
- The maximum ambient temperature t_a = 45 °C must never be exceeded.
- The relative humidity must not exceed 50 % with an ambient temperature of 45 °C.

4.3. Mounting

The VT 104 - HDMI 2.1 Splitter 1:4 can be placed on a flat surface, mounted to a surface or wall (see 4.3.2. Installation on a Flat Surface) or optionally mounted in a rack (see 4.3.2. Rack Mounting (Optional)).

Make sure that the device is powered off before mounting.

4.3.1. Mounting Bracket Installation

The VT 104 - HDMI 2.1 Splitter 1:4 is supplied with a 2 mounting brackets (see 1.1. Before Using the Product on page 3). These must be installed to mount the device on a flat surface or in a rack.

You need a Phillips screwdriver.

To install the mounting brackets, follow the steps below:

01) Remove the 4 **screws for mounting brackets (01)**.

Figure 5

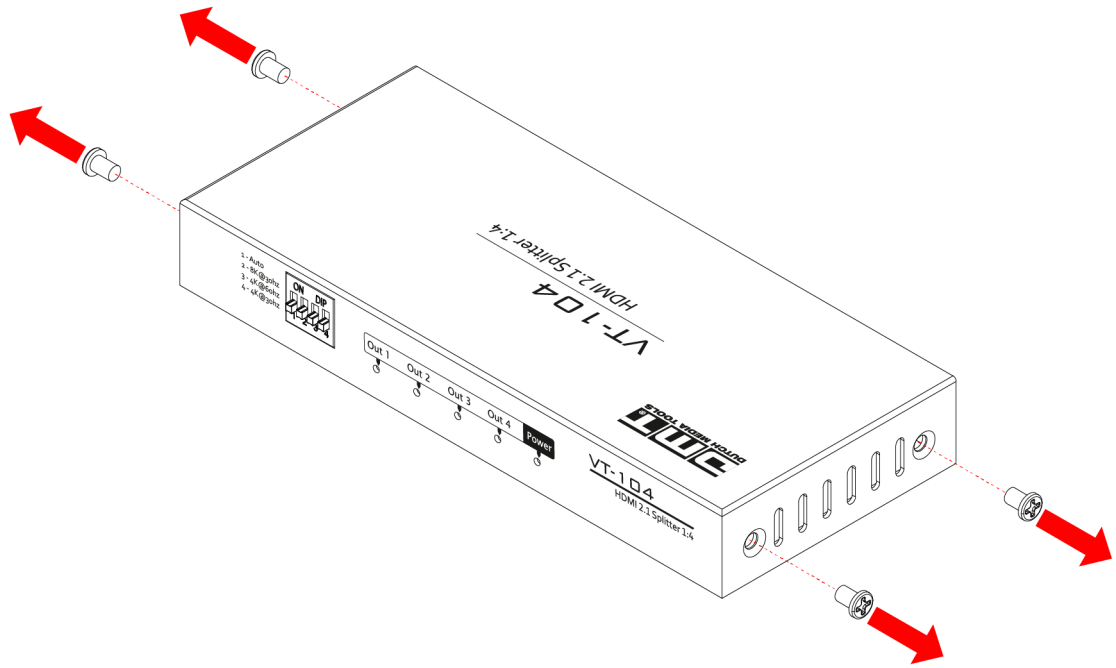

02) Place the 2 mounting brackets on both sides of the device.
03) Insert 2 **screws for mounting brackets (01)** into each mounting bracket and tighten them to attach the mounting brackets to the device.

Figure 6

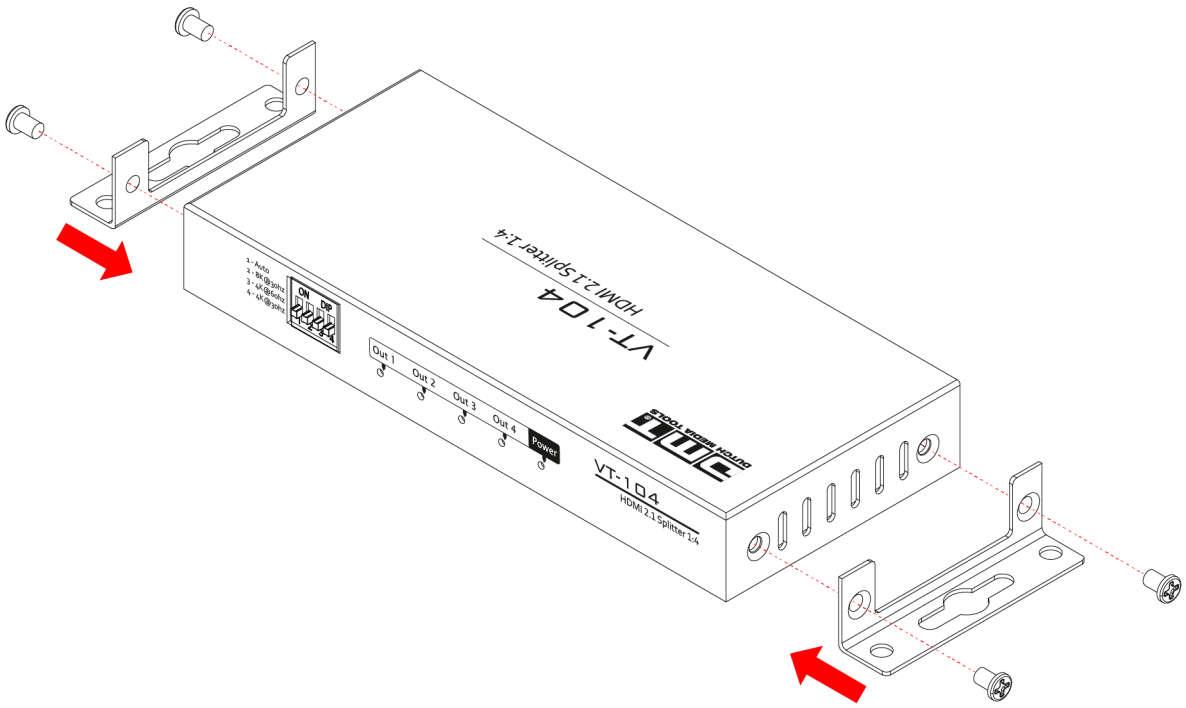

4.3.2. Installation on a Flat Surface

You can install the device on a flat surface with the 2 supplied mounting brackets.

You need the following:

- a drill
- a drill bit (for wood or concrete)
- 4 anchors (if applicable)
- 4 screws

Notes:

- Make sure that the drilling location for the mounting holes is free of obstructions such as pipes, ducts, or wires.
- Do not drill into mortar joints. Screws installed in mortar joints cannot safely support the weight of the device.

To mount the device on a flat surface follow the steps below:

01) Install the mounting brackets to the device (see 4.3.1. Mounting Bracket Installation on page 11).
02) Hold the device against the flat surface and mark the position of the 4 mounting holes in the mounting brackets on the flat surface.
03) Drill holes at the 4 marked locations.
04) Insert anchors into the drilled holes, if applicable.
05) Insert and tighten the 4 screws through the 4 mounting holes into the 4 drilled holes to fasten the device to the flat surface.

Figure 7

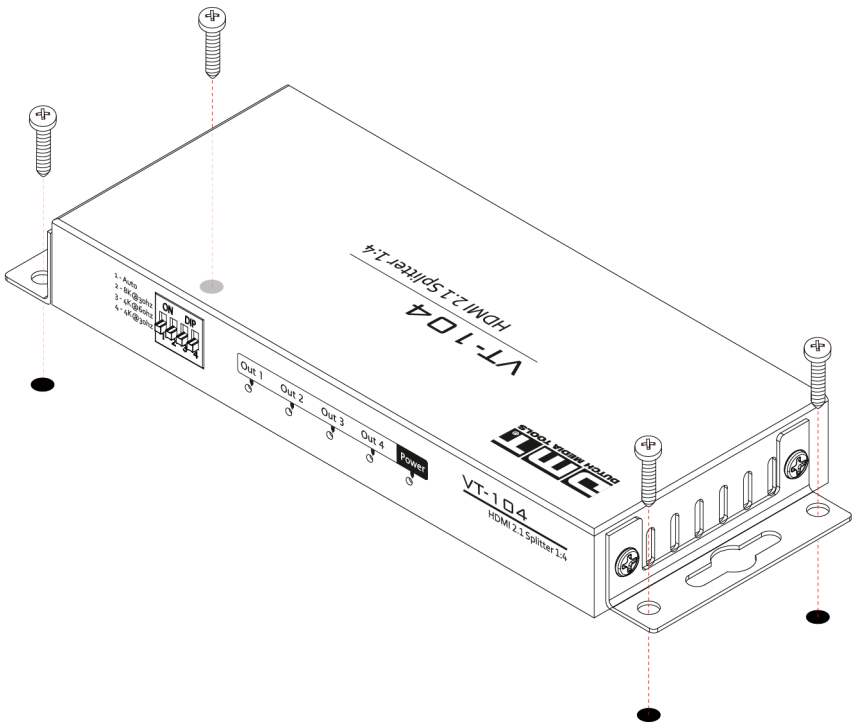

4.3.3. Rack Mounting (Optional)

An optional 19 inch rack mount kit (see 3.5. Optional Accessories on page 9) is available for use with the VT 104 - HDMI 2.1 Splitter 1:4. The rack mount kit can be used to install 1 or 2 devices in a rack. The rack mount kit requires 1 rack unit (RU) of space.

Make sure that the rack is sufficiently secured to prevent it from becoming unstable or falling over.

To mount the device in a rack with the rack mount kit, follow the steps below:

01) Use an allen key to remove the 8 allen screws that are mounted in the base plate of the rack mount kit.
02) Install the mountings brackets to the device (see 4.3.1. Mounting Bracket Installation on page 11).
03) Align the 4 mountings holes in the mountings brackets of the VT 104 - HDMI 2.1 Splitter 1:4 with 4 of the screw holes in the rack mount kit.
04) Insert 4 of the allen screws through the mounting holes into the screw holes in the rack mount kit.
05) Use an allen key to fasten the 4 allen screws.
06) Repeat steps 2–5 to install a 2nd VT 104 - HDMI 2.1 Splitter 1:4 on the rack mount kit. This step is optional.

Figure 8

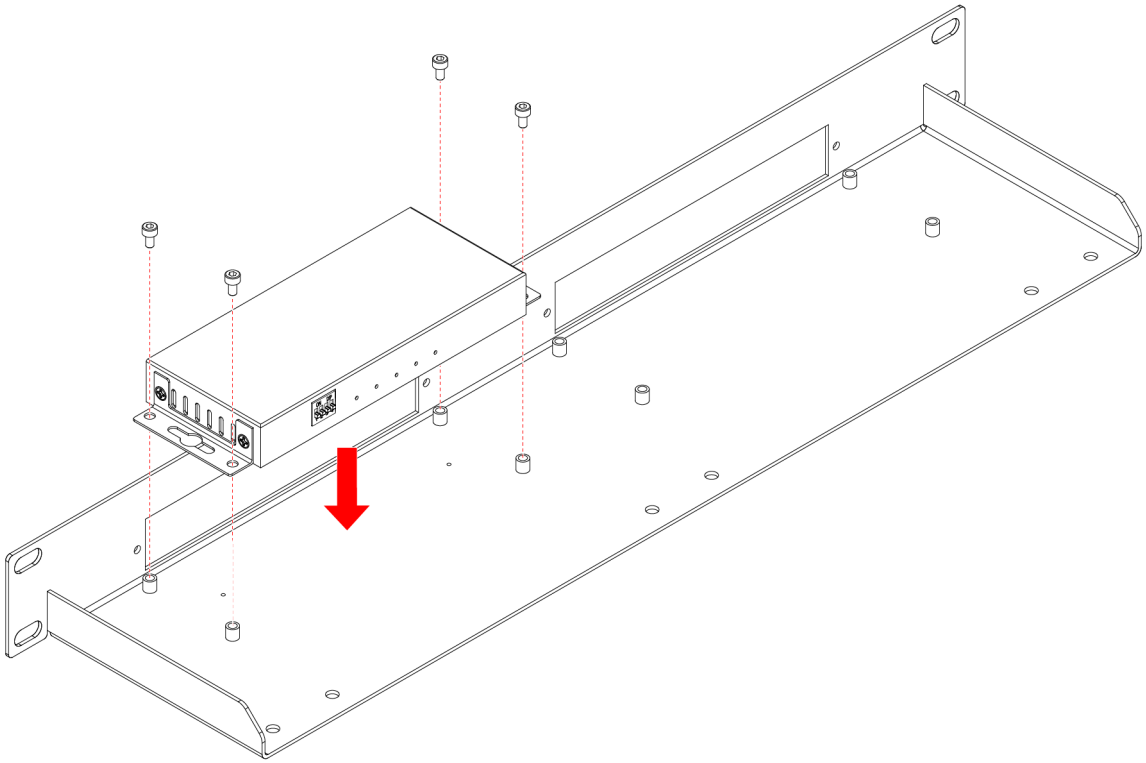

07) If only 1 VT 104 - HDMI 2.1 Splitter 1:4 is installed, align one of the 2 cover plates with the remaining opening in the rack mount kit.
08) Use an allen key to fasten the cover plate to the rack mount kit with 2 allen screws, 2 washers and 2 nuts.

Figure 9

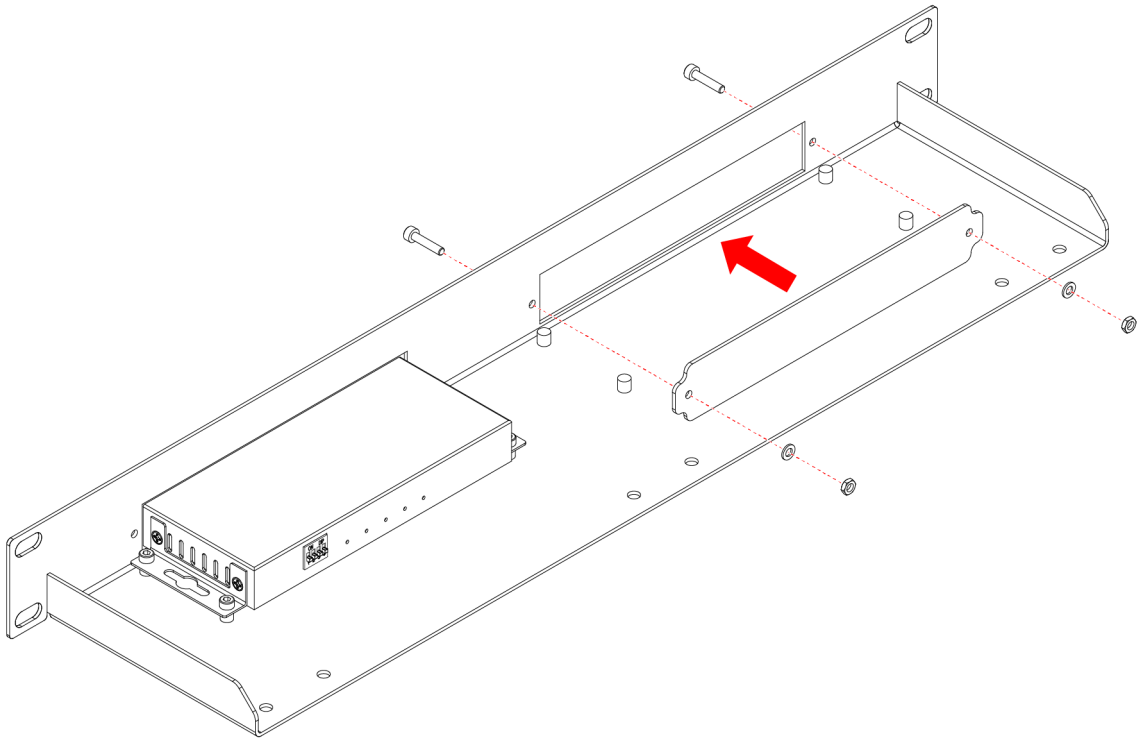

4.4. Connecting to Power Supply

Attention
Power supply

Before connecting the USB power adapter to the power supply, make sure that the current, voltage and frequency match the input voltage, current and frequency specified on the information label on the USB power adapter.

The device is delivered with a USB power adapter with a fixed USB-C cable. Alternatively, you can use a USB cable with a USB-C connector and a power sourcing equipment (a personal computer or a similar device) to power the device.

To connect the device to power supply follow the steps below:

01) Connect the USB-C connector of the supplied USB power adapter or the USB-connector of the USB cable to the **USB-C power connector IN (05)** of the device.
02) Connect the other connector of the USB cable to a power sourcing equipment (a personal computer or a similar device). Do not do this step if you use the supplied USB power adapter.
03) Connect the USB power adapter to the socket-outlet or switch on the power sourcing equipment.

When the device is connected to power supply, the device is turned on. To turn the device off, disconnect the device from power supply.

5. Setup and Operation

5.1. Warnings and Precautions

Attention
Connect all data cables before supplying power.
Disconnect power supply before connecting or disconnecting data cables.

5.2. Safety Instructions for Operation

Attention
This device must be used only for the purposes it is designed for.

This device is intended for professional use as an HDMI splitter. It can be used only indoors. This device is not suitable for households.

Any other use, not mentioned under intended use, is regarded as non-intended and incorrect use.

Attention
Power supply

Before connecting the USB power adapter to the power supply, make sure that the current, voltage and frequency match the input voltage, current and frequency specified on the information label on the USB power adapter.

5.3. Setup Example

To connect the device to other devices, follow the steps below:

01) Connect an HDMI source device (such as a PC, game console or media player) to the **HDMI connector IN (06).**
02) Connect display devices (such as TVs) to the 4 **HDMI connectors OUT (07)**.
03) Use the **DIP switch (04)** to adjust the resolution and refresh rate for the outputs (see 5.5. DIP Switch Settings on page 16).

Figure 10

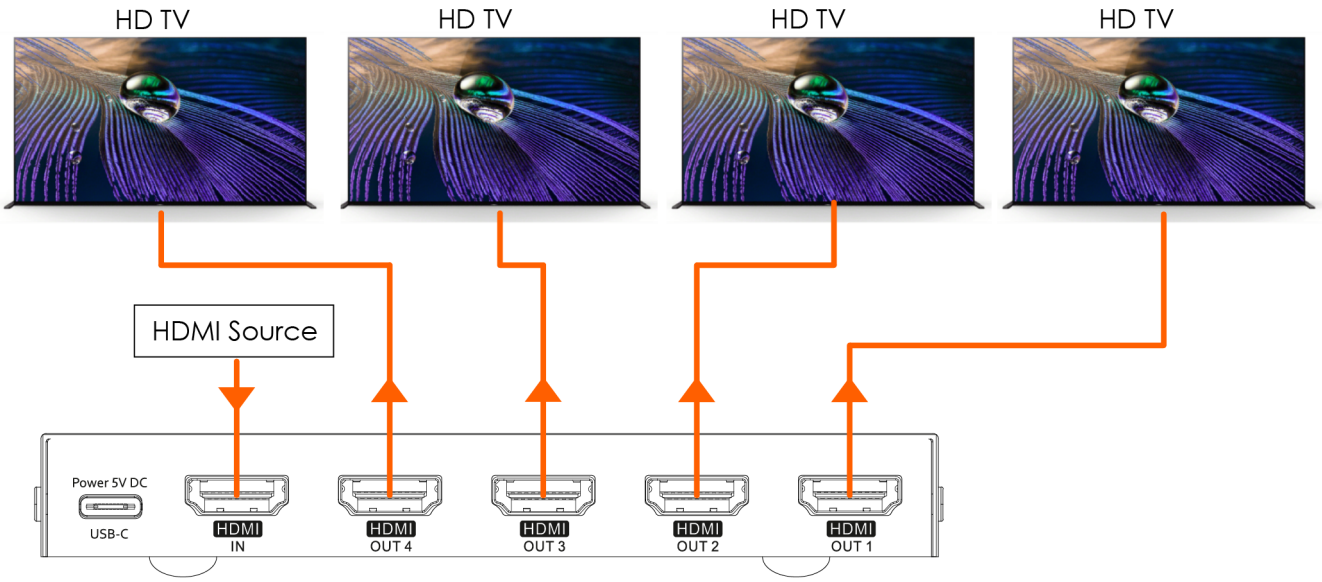

5.4. Turning ON/OFF

When the device is connected to the power supply, the device is turned on. To turn the device off, disconnect the power supply.

5.5. DIP Switch Settings

Use the **DIP switch (04)** to set the output resolution and refresh rate.

The output can be set to auto, 8K@30 Hz, 4K@60 Hz or 4K@30 Hz.

To configure the resolution and refresh rate, set the switches on the **DIP switch (04)** as follows:

Switch 1	Switch 2	Switch 3	Switch 4	Function
Up	Down	Down	Down	Auto: The splitter selects the optimal resolution and refresh rate based on the connected displays.
Down	Up	Down	Down	Enables 8K (7680x4320) @30 Hz. The built-in downscaler provides simultaneous 1080p output for displays that do not support this resolution.
Down	Down	Up	Down	Enables 4K (3840x2160)@60 Hz. The built-in downscaler provides simultaneous 1080p output for displays that do not support this resolution.
Down	Down	Down	Up	Enables 4K (3840x2160)@30 Hz. The built-in downscaler provides simultaneous 1080p output for displays that do not support this resolution.

Note:

Select only 1 mode.

5.6. LED Statuses

The device has 5 LED indicators: 4 **output LED indicators (03)** and a **power LED indicator (02).** The LED indicators have the following functions:

- Output LED indicator: If the light is on, the device is sending out an HDMI signal on the corresponding connector.
- Power LED indicator: If the light is on, the device is powered.

6. Troubleshooting

This troubleshooting guide contains solutions to problems which can be carried out by an ordinary person. The device does not contain user-serviceable parts.

Unauthorized modifications to the device will render the warranty void. Such modifications may result in injuries and material damage.

Refer servicing to instructed or skilled persons. Contact your Highlite International dealer in case the solution is not described in the table.

Problem	Probable cause(s)	Solution
The device does not power up	No power to the device	• Check if the power cable is correctly connected
The device does not function	The device is not correctly connected	• Check if the HDMI cables are correctly connected • Replace the HDMI cables
	The device cannot transfer the received signal	• Check if the output devices work correctly
The output devices do not show the expected output	Incorrect output settings of the signal source	• Check if the resolution settings are correct (see 5.5. DIP Switch Settings on page 16) • Check if the input and output devices are compatible
	The signal source is disconnected	• Check if the signal source is correctly connected

7. Maintenance

7.1. Preventive Maintenance



Attention
Before use, examine the device visually for any defects.

Make sure that:

- All screws used for installing the device or parts of the device are tightly fastened and are not corroded.
- The safety devices are not damaged.
- There are no deformations on housings, fixings and installation points.
- The power cables are not damaged and do not show any material fatigue.

7.1.1. Basic Cleaning Instructions

To clean the device, follow the steps below:

01) Disconnect the device from the electrical power supply.
02) Allow the device to cool down for at least 5 minutes.
03) Clean the device with a soft, lint-free cloth.



Attention

- Do not immerse the device in liquid.
- Do not use alcohol or solvents.

7.2. Corrective Maintenance

The device does not contain user-serviceable parts. Do not open the device and do not modify the device.

Refer repairs and servicing to instructed or skilled persons. Contact your Highlite International dealer for more information.

8. Deinstallation, Transportation and Storage

- Use the original packaging to transport the device, if possible.
- Clean the device before storing (see 7.1.1. Basic Cleaning Instructions on page 18).
- Store the device in the original packaging, if possible.

9. Disposal



Correct disposal of this product

Waste Electrical and Electronic Equipment

This symbol on the product, its packaging or documents indicates that the product shall not be treated as household waste. Dispose of this product by handing it to the respective collection point for recycling of electrical and electronic equipment. This is to avoid environmental damage or personal injury due to uncontrolled waste disposal. For more detailed information about recycling of this product contact the local authorities or the authorized dealer.

10. Approval

CE

Check the respective product page on the website of Highlite International (www.highlite.com) for an available declaration of conformity.