DiGidot

PUSHING CONTROL BOUNDARIES

C4 MANUAL

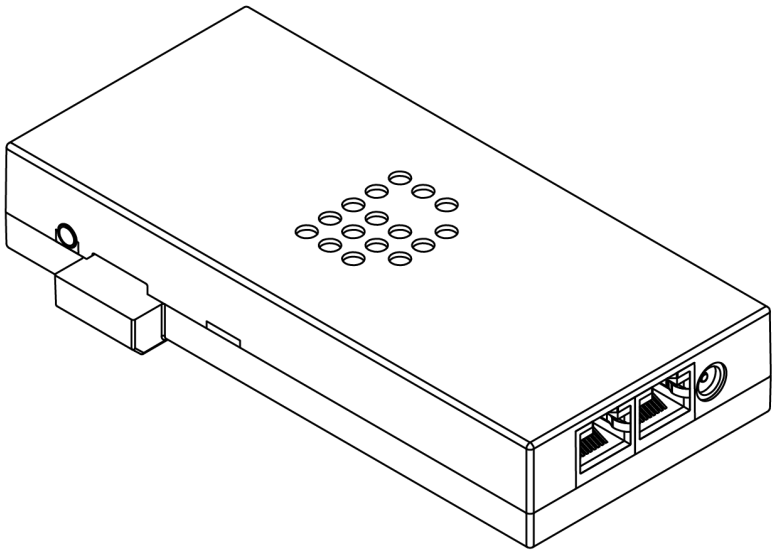

ARM · ART NET · DMX · SPI · WIFI · DMX RDM · HTP Merge · 8-16 BIT

5-24 VDC · III · IP10 · RoHS · CE · ETL · 2 Warranty

THANK YOU FOR CHOOSING DIGIDOT!

The DiGidot C4 is the most powerful and versatile LED pixel controller of its kind.
This multifunctional device enables you to create technically complex and creative pixel controlled light applications, whilst letting it look like child's play.
We strive to offer you the latest technology in LED lighting control and we're constantly innovating and expanding our control platform.
We're convinced that you have everything you need to create a truly mesmerizing and innovative piece of light art.
Are you proud of your end result? Then please share it with us, we love to see what you can do with our products!

Your DiGidot team

TABLE OF CONTENTS

TABLE OF CONTENTS 3
INTRODUCTION 6
PRODUCT INFORMATION 7
Box contents 7
C4 Live version 7
C4 Extended version 7
TECHNICAL SPECIFICATIONS 8
Product drawings 10
The DiGidot C4 explained 10
Art-Net/DMX controller required 11
Control software, DMX & Art-Net control platforms 11
Supported protocols (ICs) 11
Key features explained 11
BEFORE INSTALLATION 15
Safety instructions 15
Register your product 16
Mounting options 16
Wall mounting 16
DIN-rail mounting 17
INSTALLATION & WIRING 20
Data inputs/outputs 20
Ethernet connection 23
Connecting power 24
Power supply 24
Use of trigger inputs (Extended license only) 28
CONFIGURATION 29
Accessing the DiGidot C4 29
Wired quick start 29
Configuring computer for the built in web interface with a wired connection 29
Configuring for DiGidot app access 31
Wireless quick start 31
Device network settings for Art-Net 31
INTERFACE 33
Interface map 33
Getting started 34
Scenes (DiGidot C4 Extended only) 34
Create scenes 34
Trim scene 35
Record settings 36
Generate Scene (DiGidot C4 Extended only) 36
Playlists (DiGidot C4 Extended only) 37
Triggers (DiGidot C4 Extended only) 37
Creating triggers 38
Analog triggers 38
Analog input Calibration 38
Creating analog triggers 39
Art-Net or DMX triggers 39
Art-Net triggers (default) 39
DMX triggers 40
Power up 40
Onboard button 40

Time/date 41
OSC 42
UDP 43
HTTP 43
Internal task 44
Sunrise / sunset 44
Groups 45
Add a group 46
Group settings 46
Monitor 46
Settings overview 47
Inputs & outputs configuration (manual configuration) 47
I/O detail page 49
Network 51
Ethernet configuration 51
Wi-Fi configuration 51
Device 54
License 54
License upgrade 54
Having trouble upgrading your DiGidot C4 license? 54
Offline upgrade 55
Account 55
Interface 55
Update 56
Offline update 56
Backup and restore 56
TIPS & TROUBLESHOOTING **57**
Standard troubleshooting checklist 57
Status LEDs 57
Network status lights 58
No output signal from DiGidot C4 58
DiGidot C4 not receiving Art-Net 58
Art-Net software doesn't recognize the DiGidot C4 59
Factory reset 59
Having trouble with your DiGidot C4 Setup? 59
Forgot the username or password for the DiGidot C4? 60
Can't find your protocol/IC? 60
Need to cover greater cable distances between the outputs and first LED/IC? 60
Some LED's/colors are not responding correctly 61
No microSD card 62
C4 Extended crashes 62
Unknown error 62
Interface issues 62
FAQ **63**
How many universes can be recorded? 63
Can licenses be combined in a network? 63
How does the DiGidot C4 know what time it is? 63
Why do I get a repeating message; "The SD card(s) need to be formatted"? 63
Accessories 64
Transmitter and receiver modules 64
Accessories 64
Online resources 65
Remarks 65
Terminology 65
Compliances & EU declaration of Conformity 66
Warranty 66

Disposal and recycling 66
Feedback 66
Imprint 66
Trademarks 67
Copyright 67
Disclaimer 67
Manual version 67

INTRODUCTION

The DiGidot C4 is a unique and powerful LED controller that allows you to control pixel controlled LED products through Art-Net and DMX which are converted to various SPI protocols.
It has a huge controlling capacity with up to 6.144 individual channels (depending on the DiGidot C4 license).
A built in web based user interface allows the DiGidot C4 controller to be configured by computer and even by smartphone or tablet through the DiGidot C4 app.
DiGidot C4 controllers can be linked together to form network with unprecedented capabilities.



PRODUCT INFORMATION

Box contents

C4 Live version

- DiGidot C4 Live
- Output terminal connector
- Quick start guide
- USB power cable
- RJ45 network cable

C4 Extended version

- DiGidot C4 Extended
- Output terminal connector
- Quick start guide
- DiGidot 8 GB microSD card
- USB power cable
- RJ45 network cable
- TRRS trigger cable

NOTE: We put great care in our products and have a high quality control standard. Nonetheless we advise to double check for missing or damaged items.
In case of any missing or damaged items, please contact your supplier immediately. Never use damaged products!

TECHNICAL SPECIFICATIONS

Electrical

Input Voltage:	5-24V DC
Max. power consumption:	5W

Mechanical

Housing material:	Self extinguishing Acrylonitril-Butadieen-Styreen (ABS)
Dimensions:	153 x 74 x 28 mm | 6.02 x 2.91 x 1.10” (L x W x H)
Net weight:	140gr | 4.93oz
C4 Live weight	162 gr | 5.71oz
C4 Extended weight	392 gr | 13.82oz
Mounting	DIN-rail or surface mounted

Environmental

Operation Temperature (Tc):	0 to 50°C | 32 to 122°F
Max. ambient Temp. (Ta^{max}):	40°C | 104°F
Storage temperature:	-20 to 50°C | -4 to 122°F
Max. operating relative humidity:	90% (indoor use only)

Protection

IP rating:	IP10
Power:	Reverse polarity
Digital input / output:	Overvoltage protection (max. 24Vdc)
Analog input:	Overvoltage protection (max. 12Vdc)

Control

Input Protocols:	Art-Net 1,2,3 DMX512 (2 inputs) DMX RDM (2 inputs) DiGidot C4 app
Output Protocols:	Art-Net 1,2 & 3 (out/through) DMX512 (2 outputs) DMX TTL (4 outputs) 54+ SPI protocols (check supported IC’s list) UDP (DiGidot C4 Extended only) OSC (DiGidot C4 Extended only)
Output channels (of 4 I/O ports):	Up to 6.144 Art-Net channels or 1.024 DMX channels (license dependent). Physical port limit: 3570 channels.
Ethernet:	RJ45 compatible, for 10/100 Base-TX Ethernet
Wi-Fi:	10/100 Base Ethernet with static IP Address or DHCP
Wi-Fi protocols:	802.11 b/g/n (HT20)
Frequency range:	2.4 GHz ~ 2.5 GHz (2400M ~ 2483.5M)
TX Power:	Max. +20 dBm
Antenna:	Onboard
Wi-Fi Mode:	Client + AP
Wi-Fi security:	WPA, WPA2
Encryption:	WEP/TKIP/AES

Technical Specifications

Trigger options:	max. 3 dry contacts max. 3 analog inputs (0-10V, potentiometer 50 kΩ Lin) HTTP-Get UDP JSON OSC Internal clock Power up Onboard button Art-Net / DMX DiGidot C4 web based user interface DiGidot C4 app
Programming & control:	DiGidot C4 web based user interface DiGidot C4 app Any type of Art-Net Software/Device (visit our website: www.digidot.eu for a complete list of supported software)

Connectivity

Terminal wiring:	Max. 2,5 mm2 (14 AWG)
Connectors:	Power: 5-24 Vdc power jack Network: 2 x RJ45 bus IO port: 6-pin Input/Output terminal connector Trigger input: 4-pin 3,5 mm TRRS mini jack

Quality

Warranty:	2 year carry in factory warranty
Compliances:	CE, listed under No. 2016/119-1 cETL US, listed under No. 5010008 RoHs
Applied standards:	EN60950-1:2006 +A11:2009 + A1:2010 + A12:2011 + A2:2013, IEC60950-1 / EN60950-1, EN61006-6-3, EN55032
HS Code:	8537109090

Product drawings

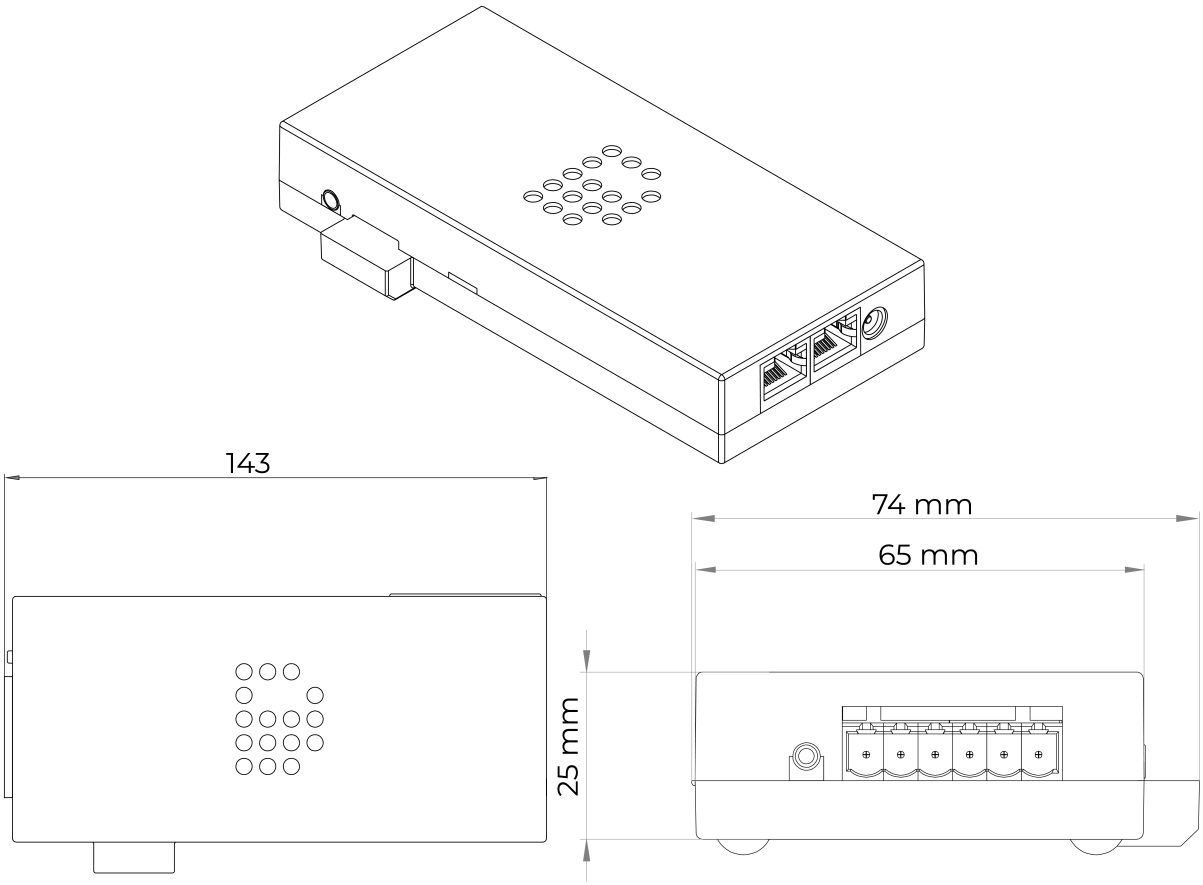

The DiGidot C4 explained

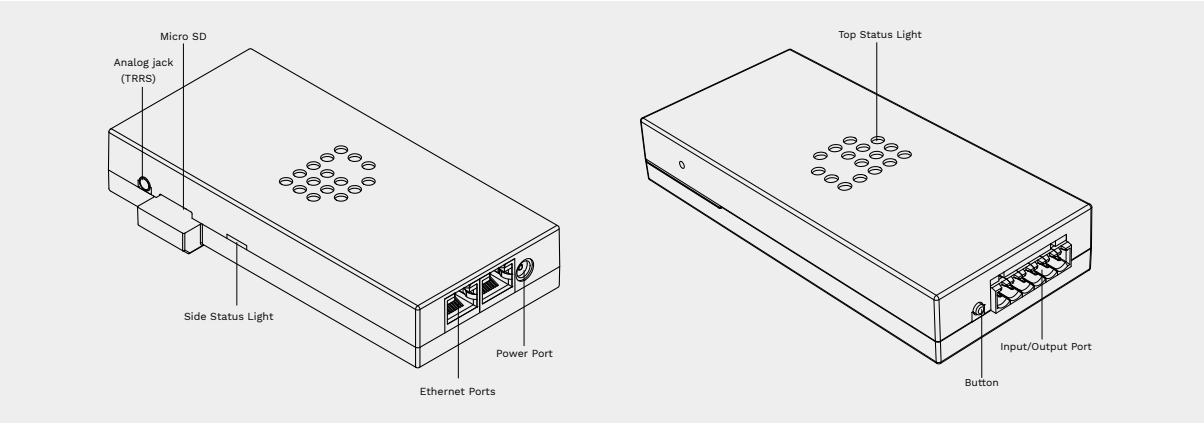

Art-Net/DMX controller required

In order for the DiGidot C4 to work in a live system setup or to be able to record scenes (DiGidot C4 extended only), a third party Art-Net/DMX software or console is required. The DiGidot C4 controllers are known to be working with various professional grade softwares and consoles, such as: MADRIX, Pharos, ArKaos, Resolume Arena, MadMapper, POET, grandMA and many more. As long as the control software or console uses industry standard Art-Net or DMX protocols, you can control the DiGidot C4 controller.

Control software, DMX & Art-Net control platforms

When the setup process has been completed, the DiGidot C4 is ready to be used with any type of Art-Net/DMX software/device.
The DiGidot C4 can automatically be detected as an Art-Net device, depending on the software or console. In order to do so, an Input/output configuration must be completed first.
Each DiGidot C4 can be configured to have a unique IP address for unicasting. Assign a device name to the DiGidot C4, for easier recognition (see the chapter Configuring the DiGidot C4).

Supported protocols (ICs)

The DiGidot C4 supports many 'Data' and 'Clock+Data' SPI protocols. Following protocols/LED Driver ICs are supported:

APA102, APA102_8bit, APA104, APA106, BS0901, CX808, DM412, GW6205_400kHz, GW6205_800kHz, GS8208, INK1003, LD1510, LPD6803, MBI6024, MBI6120, MY9221, MY9231, PC5XS301V0500, SK6812, SK6812RGBW, SK6822, SK8922, SM16703, SM16716, SM16726, TM1803, TM1804_400kHz, TM1804_800kHz, TM1809, TM1812, TM1814, TM1914A, UCS1903_400kHz, UCS1903_800kHz, UCS1904, UCS2903, UCS2904, UCS2912, UCS512B3, UCS5603A, UCS8904, UCS9812, WES9412, WES943, WS2801, WS2803, WS2811_400kHz, WS2811_800kHz, WS2812, WS2812B, WS2812S, WS2813, WS2818

For an up to date overview of supported protocols/ICs visit www.digidot.eu.

Key features explained

The DiGidot C4 has many powerful features, in this chapter we will explain what these key features do.

More than 50 supported protocols
The DiGidot C4 supports more than 50 control protocols.

Up to 12 universes Art-Net to SPI conversion*
Depending on your DiGidot C4 version and license, you can output up to 12 universes, equaling 6144 control channels.

Art-Net In/Out
The onboard 100Mbit switch allows for an Art-Net input and output.

DMX In/Out

The four I/O ports can be configured as one or two DMX inputs or outputs. It's also possible to use one input and one output.

The I/O ports can also be configured as 4x DMX TTL which can be converted to four balanced DMX outputs when a DiGidot Tx Transmitter module is connected to the DiGidot C4.

Art-Net IP Address filter

With this feature you can configure the DiGidot C4 to only listen to a specific IP Address as input. Signals from other IP Addresses will be ignored.

Art-Net routing

You can route any of the incoming Art-Net universes to the DMX or Art-Net outputs.

HTP merge signal inputs

It is possible to merge various input signals such as DMX and/or Art-Net according to the HTP (Highest Takes Precedence) principal.

Art-Net & DMX Monitor

The Monitor is a powerful tool where all incoming and outgoing data as well as frame rate and network status can be monitored.

Repeat input/output channels

Create simple chase effects for large amount of pixels by simply copying a specific amount of input channels after each other.

Examples

1. Repeating 3 RGB pixels: Output channels 1,2,3,4,5,6,7,8,9 will correspond to input channels 1,2 and 3.

   Number of linked channels: 1

   Repeat linkedchannels: 3

   Input channels

   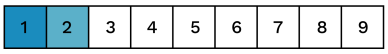

   Output channels

   

2. Convert a pixel product into simple '1,2,3,' chaser for less control channels: Copy the input channels 1,2,3, in the following order the outputs.

   Number of linked channels: 3

   Repeat linkedchannels: 1

   Input channels

   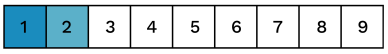

   Output channels

   

3. Increase pixel size/ decrease channels: Combine/group multiple output channels into one, in order to save input channels.

NOTE: Combining input channels will not reduce the amount of output channels.
The DiGidot C4 is always limited to the total amount of output channels corresponding to the license.
The number of input universes is not limited.

Daisy chain-able
The two port ethernet switch with RJ45 bus allow the DiGidot C4 to be daisy chained. Daisy chaining more than 5 devices can cause network delays. Therefore we recommend to use a professional grade Gigabit network switch to split the network load.

Build-in scene generator (DiGidot C4 Extended only)
You can generate simple static or color scroll scenes in the user interface, store them and activate them by any trigger option.

Scene recording from Art-Net or DMX (DiGidot C4 Extended only)
The record function can be used to record Art-Net or DMX streams and store them as recorded scenes.

Scene triggering by various digital or analogue control inputs (DiGidot C4 Extended only)
Recorded scenes can be triggered by a huge amount of analog and digital triggers, such as 0-10V, dry contacts, on board push button, build-in timer, HTTP Get, UDP, OSC, Art-Net, DMX, etc.

On board Wi-Fi
The DiGidot C4 features onboard Wi-Fi for convenient wireless access through the free DiGidot app or when accessing through the web interface. Wi-Fi can also be used for triggering.
We discourage sending Art-Net over Wi-Fi, although it is possible.

Gamma correction
This is a function to correct the light intensity, luminance or brightness of the input. This amount of gamma correction changes not only the brightness, but also the ratio of red, green and blue.

Adjustable background/fall back color
In case of absence or loss of the control signal, a fall back color can be set for every DiGidot C4. You can also set the delay time before the fall back activates.

Online/offline firmware updates
We offer online updates easily within the user interface and offline updates in case that the DiGidot C4 controllers are not connected to the internet. You can download the DiGidot c4 firmware at digidot.eu/c4/digidot-c4-updates/. Use the download link to get the file. You can upload the new firmware at http://10.254.254.254/fwupdate.htm. You can also change the '10.254.254.254' in the URL into the IP Address of your DiGidot C4 device. It is also possible to upgrade or downgrade multiple devices simultaneously.

Output limiter

You can limit the output power to a pre-set brightness.
There are two ways to do this:

- **Brightness limiter**

  This option limits the individual channels to a specific percentage. This means that every channel or LED will never exceed this percentage.

  E.g.: Limiting brightness to 50%, means that all individual channels can never exceed 50% but the control range per channel will remain the same. Effectively the percentage is applied to the input value for each channel.

- **Adaptive power limiter**

  This option limits the total average output of all channels combined to a specific percentage in order to decrease total power consumption. Individual channels my still output up to 100%.

  E.g.: Limiting power to 50% means that half of the channels can output 100% and the other half at 0% or all channels at 50%, etc.
  In case you would try to output all channels to 75%, the output of all channels would be automatically limited to a total 50%, but will maintain ratios relative to each other.
  16 bit dimming output
  Whenever high resolution dimming is required and supported by your IC, two input channels can be combined to one output channel in order to convert 8 bit to 16 bit dimming.

Configure LED color order

In case a LED product has an alternative order of LED chips or dyes, you can change the order of control channels easily in the user interface. The interface uses the default color order of the selected IC.

BEFORE INSTALLATION

Before installing DiGidot products it's important to consider following safety and installation instructions.

Safety instructions

- Before installation and use of this product, read this manual carefully.
- Make sure that these instructions are handed over to the end-user and those responsible for installation and usage.
- Local electrical and safety rules and guidelines always overrule this manual.
- DiGidot Technologies B.V. cannot be held liable for improper handling, product installation, usage or storage.
- Installation should only be carried out by a professional and certified installer that is qualified to work on the electric installation.
- Do not conduct any repairs of the device (there are no user serviceable parts inside). Any unapproved repairs and/or product modifications will void product warranty. DiGidot Technologies B.V. cannot be held liable for any consequences.
- Repairs of this product may only be carried out by the manufacturer DiGidot Technologies B.V.
- Repairs and maintenance on the installation may only be carried out by qualified technicians.
- Always disconnect the mains power when working on a high voltage electric installation, not doing so may result in product damage or personal injuries.
- Do not connect or modify this product other than described in this manual.
- Never use a product that is damaged or does not work correctly or when the product is visibly damaged or when the product starts to smoke, or when a crackling/sizzling noise is audible. If this is the case in any way, please contact your supplier immediately.
- The DiGidot C4 is a low voltage device. Working voltage is 5-24 Vdc only.
- Never connect more than one power source to the DiGidot C4 (USB OR external PSU). Never use the USB power connector when also powering with an external power source. This will damage your DiGidot C4 and/or the USB device!
- The DiGidot C4 is not POE ready (Power Over Ethernet)! Applying POE will cause fatal damage to the DiGidot C4. Make sure that POE is turned off in your access point, router or network switch settings, before connecting the DiGidot C4 to your network.
- The only way to power off your device is to disconnect it from the power source.
- The DiGidot C4 is designed for indoor use (dry locations) only. Exposure to rain or moisture may cause damage to the controller and increase risk of electrical shock.

Register your product

Please register your product with us
Registering your product(s), is easy for license and device management, it will speed up the upgrade process and ensures faster technical support.

Register your product at digidot.eu **>** 'My account' **>** 'My products' or in the user interface to receive helpful tips, news, updates and to ease license management.
This page will recognize products by their MAC address and/or by scanning the QR code, using a webcam or smart device camera.

- To register your product, you will require a DiGidot account.
- If you have created or signed into your DiGidot account with the User Interface of your DiGidot C4, your product may already be registered. To verify your registration, please log in and check your profile.

TIP: For registering your devices, please use Google Chrome browser for optimal results.

Mounting options

Install the DiGidot C4 properly in a safe environment and protect the device from direct sunlight, rain, moisture. Make sure that the device is installed and secured properly and that it's not able to move around.
If you have any doubts regarding the environmental circumstances of your application, please contact your DiGidot reseller or DiGidot Technologies B.V. prior to installation for further consultation.

Wall mounting

Use the mounting holes on the underside of the housing to mount the C4 to install the device vertically or horizontally. (screws not included)

Mounting examples

Horizontal:
Slide into place

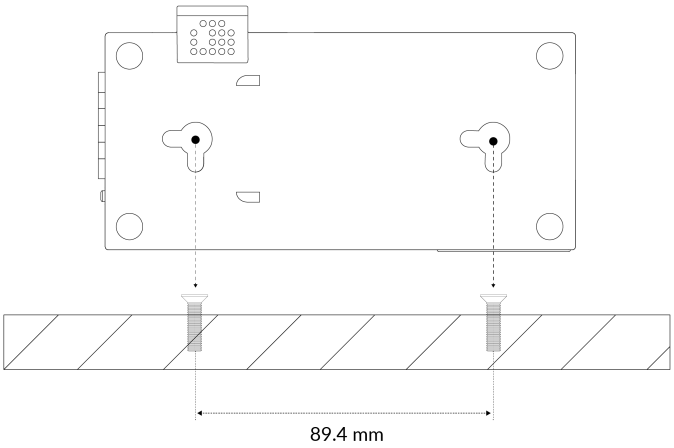

Vertical:

Slide into place

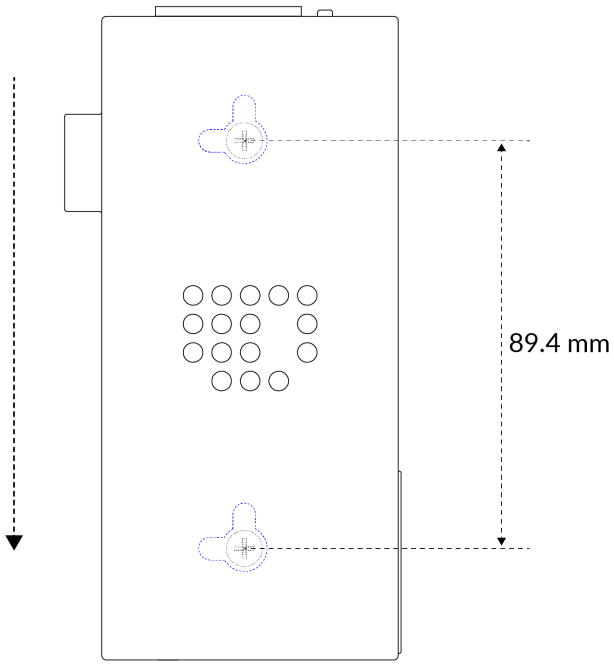

DIN-rail mounting

For 35 mm DIN-rail mounting use the DiGidot DIN-rail clip, art. No. 20902 (not included). Place the DIN-rail clip against the DIN-rail alignment marker on the DiGidot C4 housing and align both mounting holes (see picture).

Install the clip with the included 3x 12 mm screw. When the DIN-rail clip is secured properly, you can install the device easily on a DIN-rail (see picture).

NOTE: Do not place devices directly next to each other, but leave at least 10 mm space between units to allow for sufficient air circulation around the device.

Install DIN-rail clip

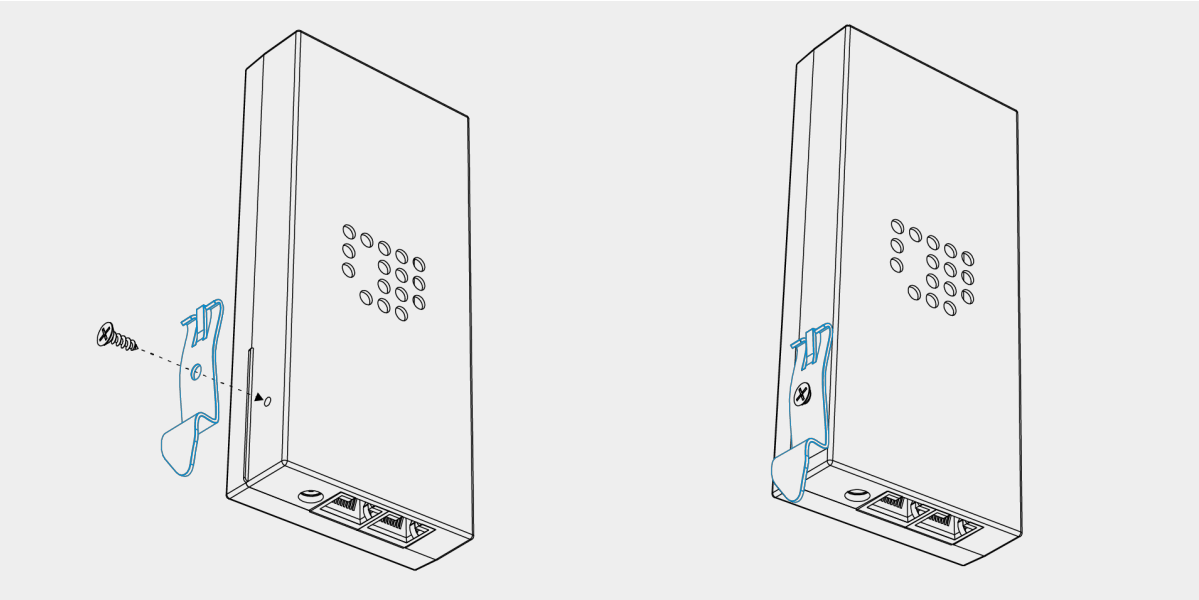

Mount DiGidot C4 on DIN-rail

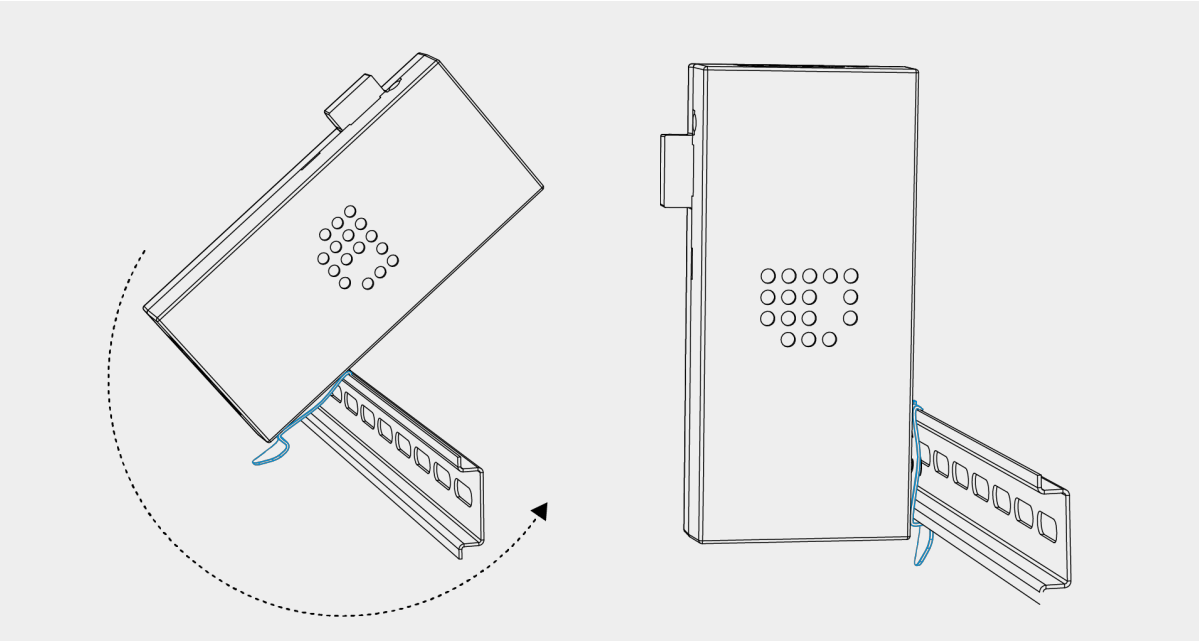

Removing the DiGidot C4 from a DIN-rail

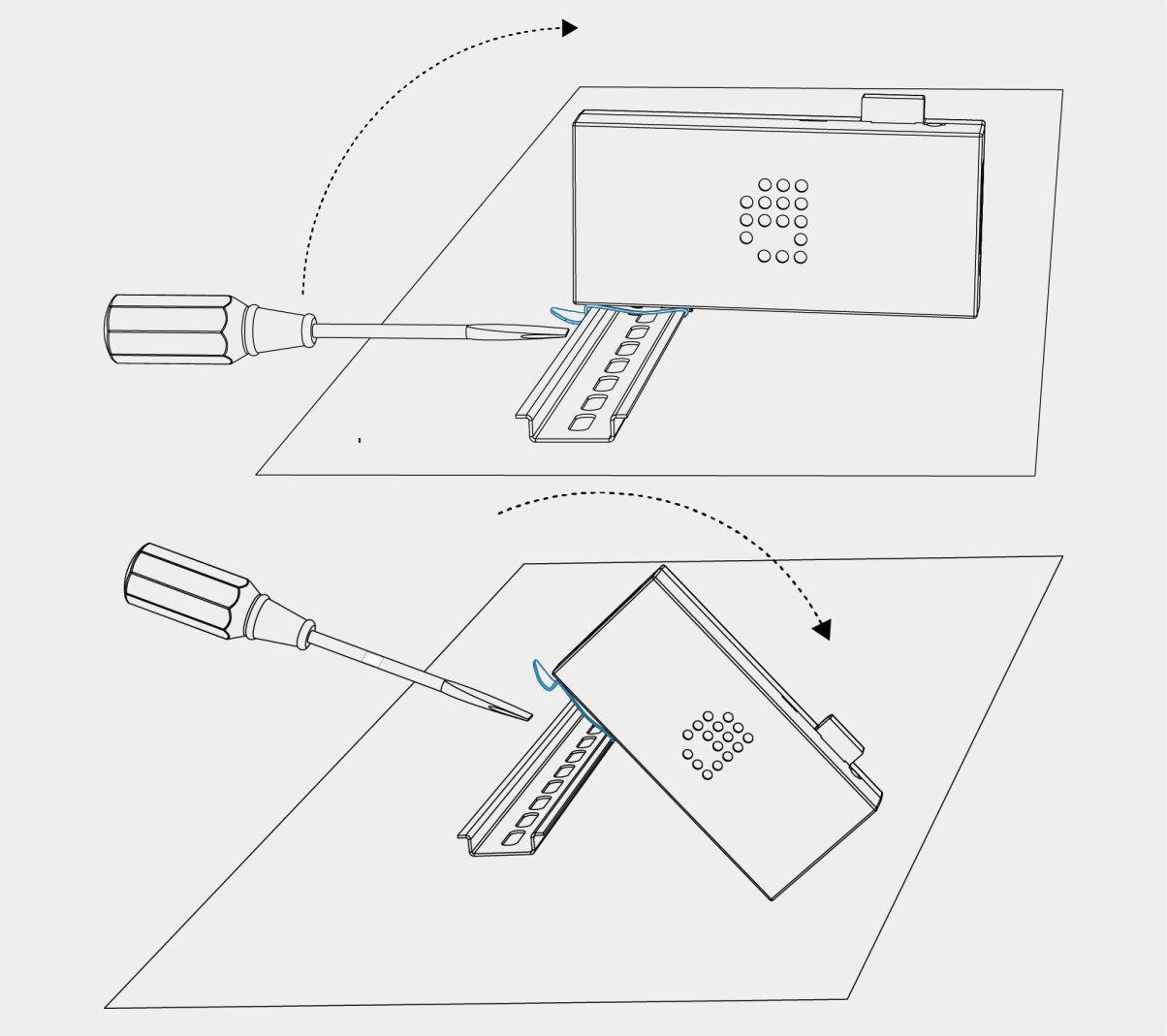

WARNING!



Do not cover this device by any insulating material (fire hazard).
The DiGidot C4 should not be placed in a hot environment or subjected to direct or indirect fire (explosion risk)!
The DiGidot C4 should not be subjected to higher temperatures than their specification range (explosion risk)!



he DiGidot C4 should not be subjected to extremely low air pressure (risk of component gas/liquid leakage).
Keep the DiGidot C4 away from sunlight, rain or other moisture (short circuit risk).
Do not use the DiGidot C4 outdoors or in humid environments (short circuit risk).
Provide enough air circulation around the devices for cooling.



Devices rigged overhead must include an appropriately rated safety cable.

INSTALLATION & WIRING

The DiGidot C4 is not designed to power the LED lights but only to transmit signal/data to the LED lights/control IC's. An additional external power supply with properly rated output capacity is required to power the LED lights.

Data inputs/outputs

In this chapter we will go through various wiring diagrams, depending on the Input/Output (I/O) configuration.
The DiGidot C4 is capable of sending different SPI protocols (only one protocol at simultaneously).
The input /outout pmts can also be configured as DMX inputs or outputs. This means that there are many ways of connecting to the I/O ports. You can always verify your wiring in the 'How to connect' box of the input/output configuration page in the user interface.

Go in the user interface or app to *Home* **>** *Settings* **>** *In/out configuration*

TIP: Make sure to select the correct device if you're using multiple devices and different I/O setups. You can use the highlight button to identify your device.

NOTE: There are some important principles when working with SPI signals.
In order to minimise the risk of data failures and to assure proper system functionality, the data cables/wires between the output port (D1-D4) and the first LED luminaire/IC, should be no longer than 2 meters (6,5 ft).

In case of longer distances we advice to use range extending accessories (visit our website www.digidot.eu for suitable accessories).
To avoid timing and synchronization issues, the SPI signal and ground wires that are running from one DiGidot C4 to the LEDs must be equal in length per port. It's best to treat SPI signal and ground wires always as a paired cable.
In order to maintain good signal integrity, it's required to keep the wiring capacity as low as possible. Therefore the data wiring gauges for the D1-D4 output ports should be kept between 0,3-0,5 mm2 (20-24 AWG).

4X SPI OUT

Recommendation is max. 3 SPI universes per port | SPI cable length max. 2 m. (7 ft.)

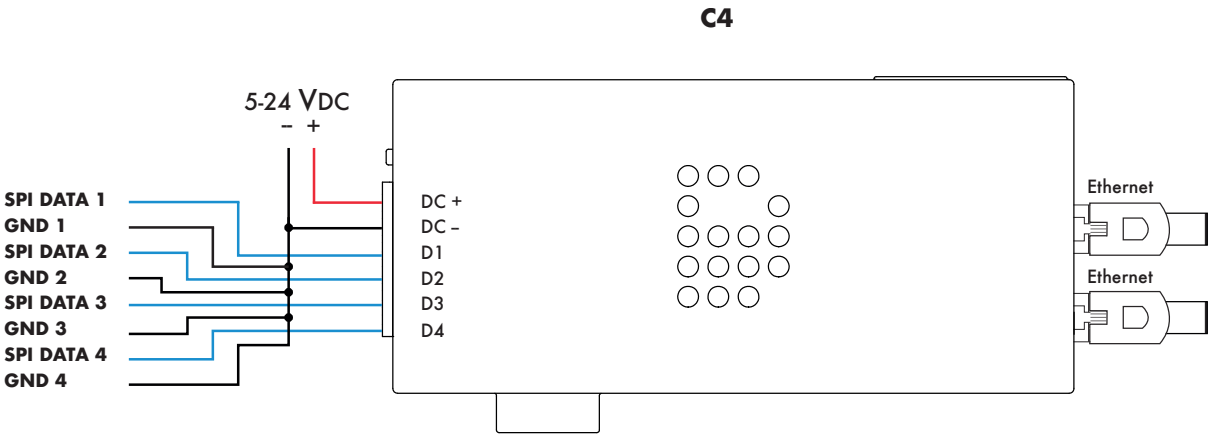

This option shows four SPI Data only outputs. Each SPI Ground wire must be the same length as the Data wires per output, to prevent timing issues.

2 x SPI DATA + CLOCK OUT

Recommendation is max. 6 SPI universes per port | SPI cable length max. 2 m. (7 ft.)

This option shows two SPI Data + Clock signals. Please note that all grounds must be connected.

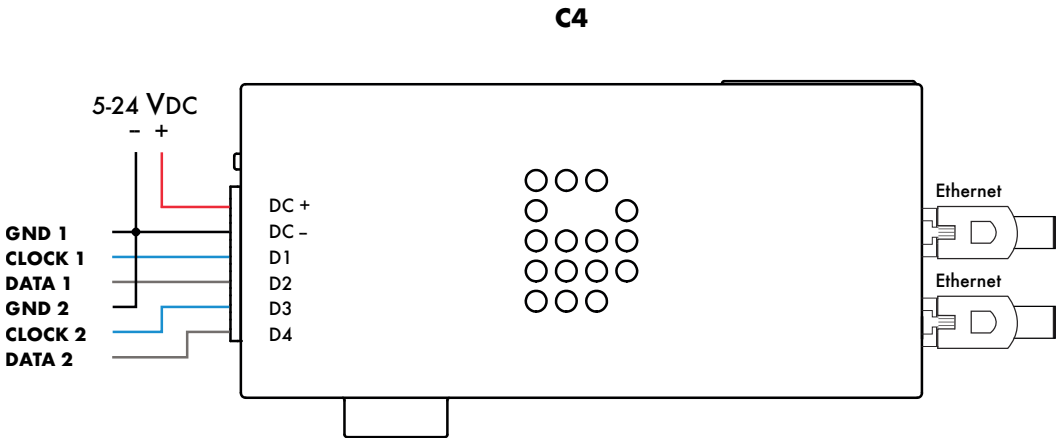

1 x DMX IN/OUT + 1 x SPI OUT

Max. 512 channels per combined DMX port | DMX cable length max. 900 m. (2900 ft.)

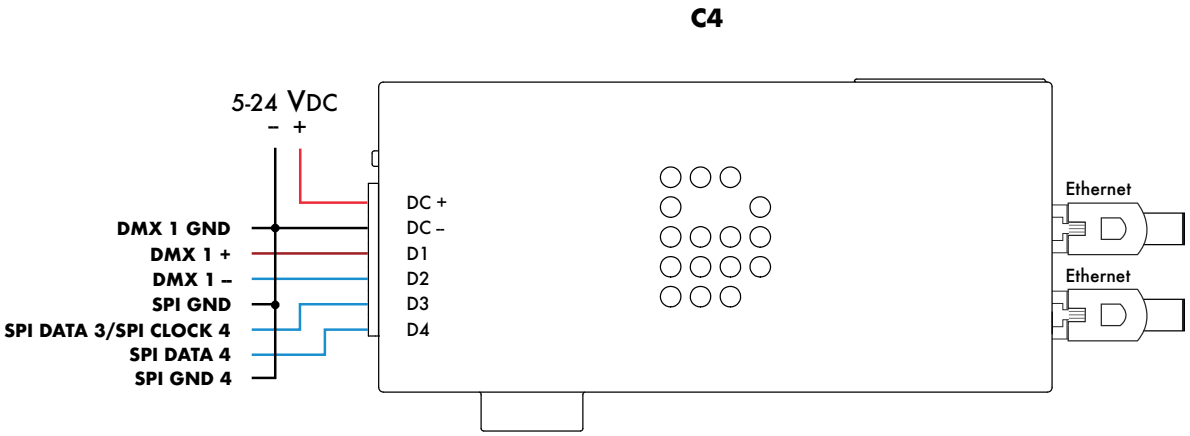

This option shows a combined output of SPI and DMX in or out. Please note that the SPI type (Data only or Data + Clock) determines how you need to connect the SPI signal(s). A Data + Clock signal always requires two outputs of the C4. Cable should be DMX cable with an impedance of 110 Ohm or CAT5 or higher.

2 x DMX IN/OUT

Max. 512 channels per combined DMX port | DMX cable max 900 m. (2900 ft.)
This option shows two DMX in- or outputs. Every DMX signal requires a connected ground as indicated above. Cable should be DMX cable with an impedance of 110 Ohm or CAT5 or higher.

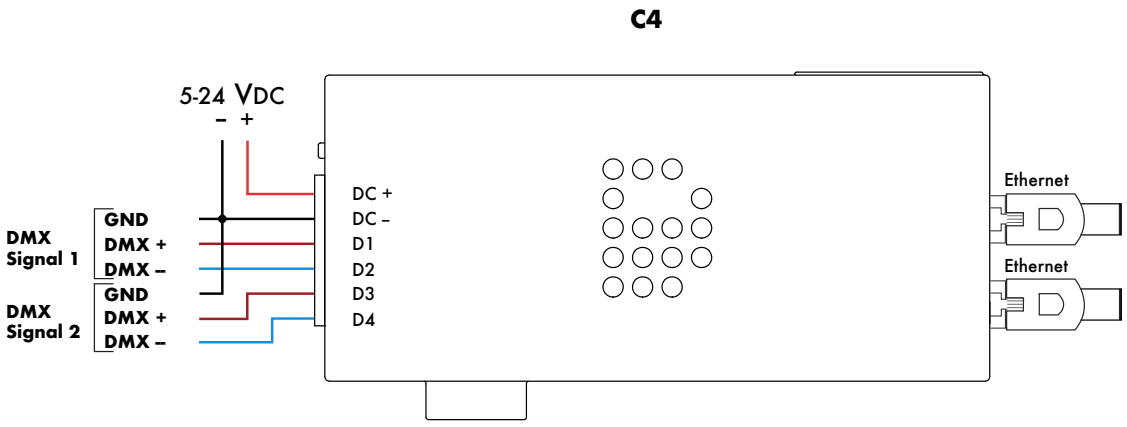

Ethernet connection

The DiGidot C4 has a built-in two port ethernet switch that allows multiple units to be daisy chained. Due to syncing, latency and performance reliability, we advise to keep the amount of daisy chained devices to a minimum. Depending on the overall network data load, the amount of daisy-chainable devices might range from 3-8 devices.
In order to solve latency issues we recommend minimizing the amount of daisy chained devices and adding Gigabit Ethernet Switches to the network. We recommend using unicasting when using Art-Net, because this wil lower the network load and increase performance.

1-2 DMX IN / 1-2 DMX OUT / SPI OUT (DAISY CHAINED)

DMX max. 512 channels per combined DMX port | DMX cable max. 900 m. (2900 ft.) / Recommendation is max. 3 SPI universes | Cable max 2 m. (7 ft.)

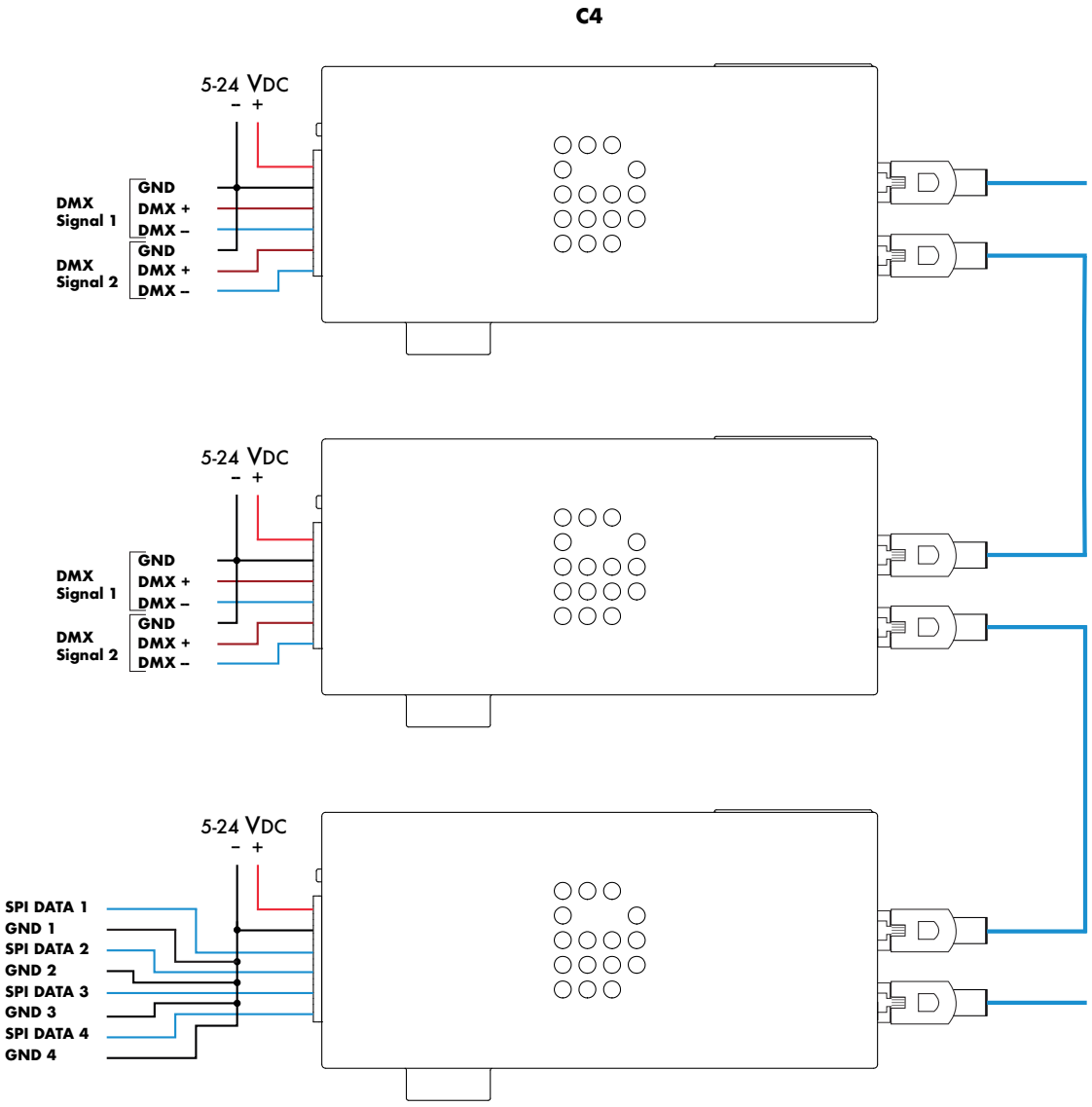

This is an example of multiple C4 units with different configured ports in a network.
Network cable length max. 100 meters (Cat5E or higher). It's recommended to use a Gigabit Ethernet switch when connecting more than five DiGidot C4 controllers.

Connecting power

Before connecting power, make sure that the outputs are wired properly to avoid short circuits.

IMPORTANT: When you're using different power supplies to power the DiGidot C4 and the LEDs, it is of utmost importance to equalize the ground potentials.
Always connect grounds (DC-) of DiGidot C4 controller and every power supply, connected to every product that is controlled by a single DiGidot C4 controller to each other.
If the grounds are not connected, this will cause malfunctioning.

Power supply

Only use a stabilized SELV rated power supply or any USB charging port that provides 5 Watts at 5Vdc to power the DiGidot C4. Note that electronic switched power supplies usually have high inrush currents, please make sure to check all specifications carefully and design your infrastructure accordingly.

We recommend following power supply models to power the DiGidot C4:

- Mean Well APV-8-5 AC-DC Single output LED Driver
  Constant Voltage (C.V.); Input 90-264Vac; Output 5Vdc at 1.4A

- Mean Well APV-8-12 AC-DC Single output LED Driver
  Constant Voltage (C.V.); Input 90-264Vac; Output 12Vdc at 0.67A

- Mean Well APV-8-24 AC-DC Single output LED Driver
  Constant Voltage (C.V.); Input 90-264Vac; Output 24Vdc at 0.34A

Wiring scheme 1

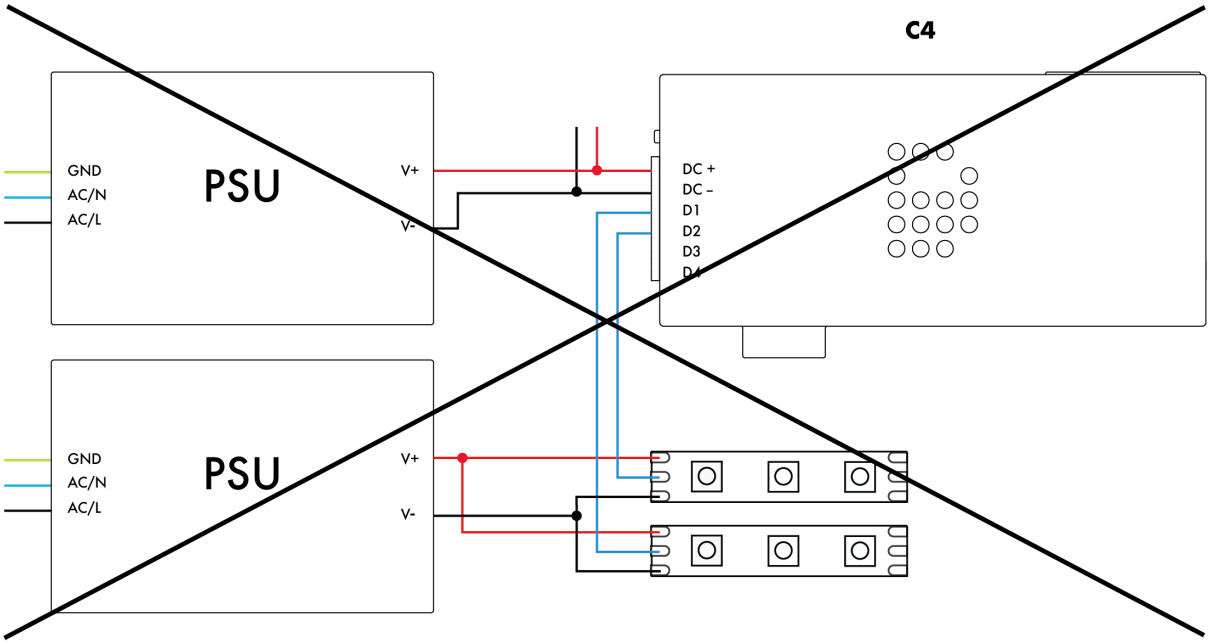

DON'T

Grounds are not connected and not the same length as the data wires.

Wiring scheme 2

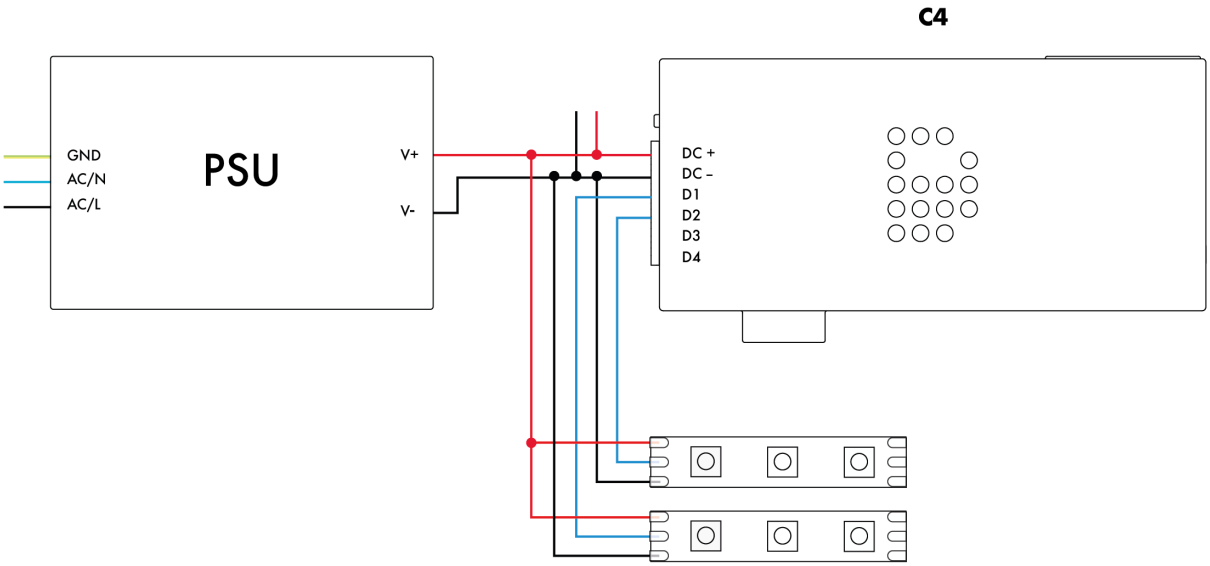

DO

Each SPI Ground wire must be the same length as the Data wires per output, to prevent timing issues.

Wiring scheme 3

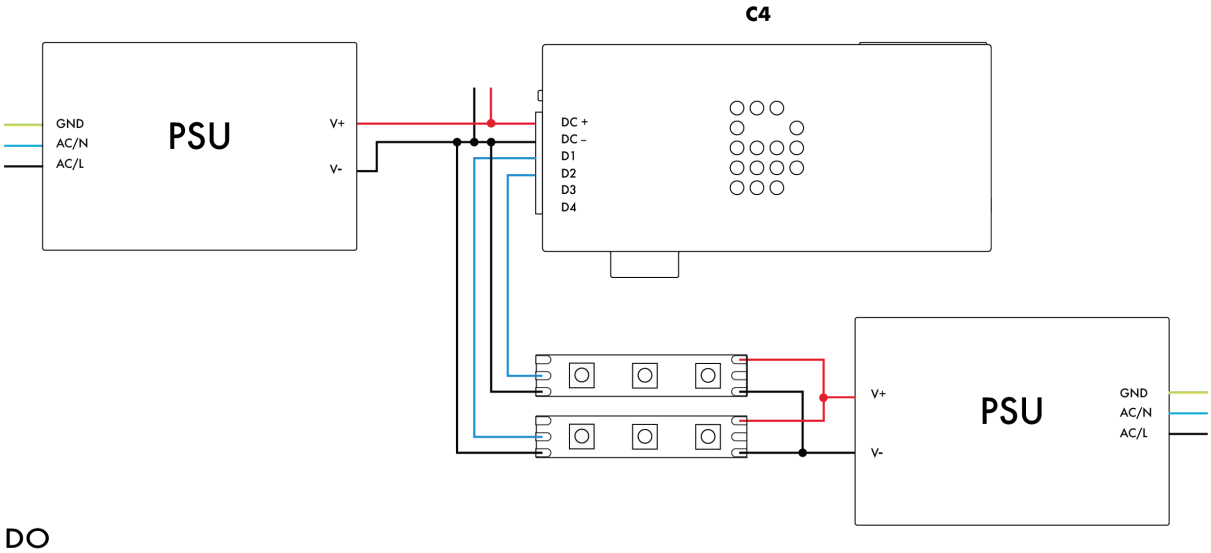

DO

Each SPI Ground wire must be the same length as the Data wires per output, to prevent timing issues.

Wiring scheme 4

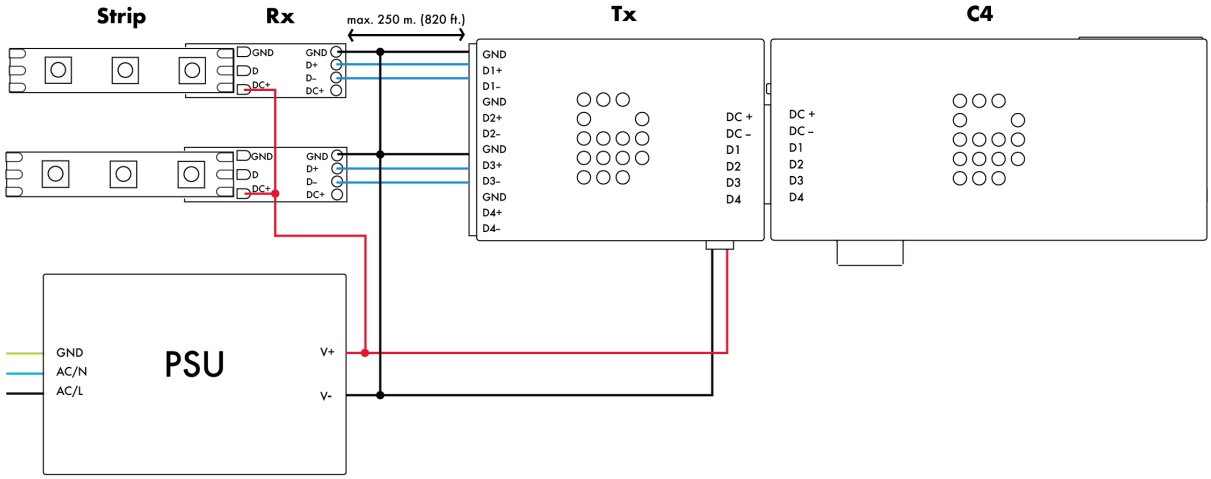

DO

Example of two SPI controlled LED strips with Tx and Rx modules, with two power supplies. Each SPI Ground wire must be the same length as the Data wires per output, to prevent timing issues.

Wiring scheme 5

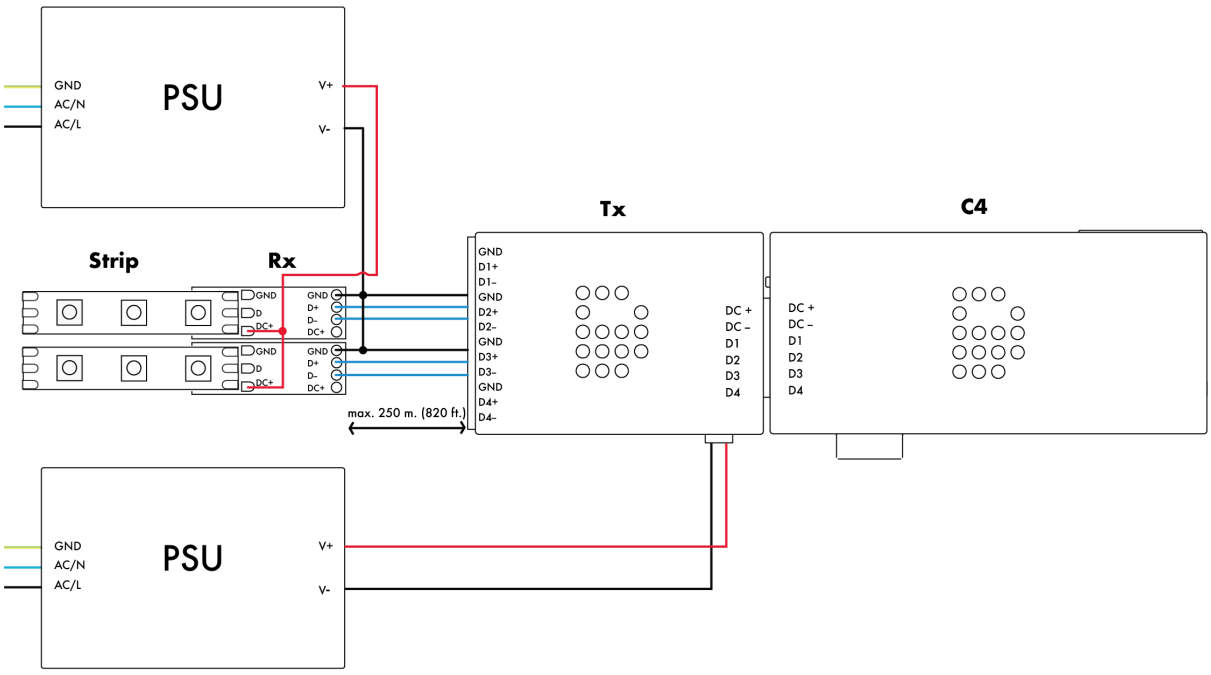

DO

Example of two SPI controlled LED strips with Tx and Rx modules, with one power supply. Each SPI Ground wire must be the same length as the Data wires per output, to prevent timing issues.

Wiring scheme 6

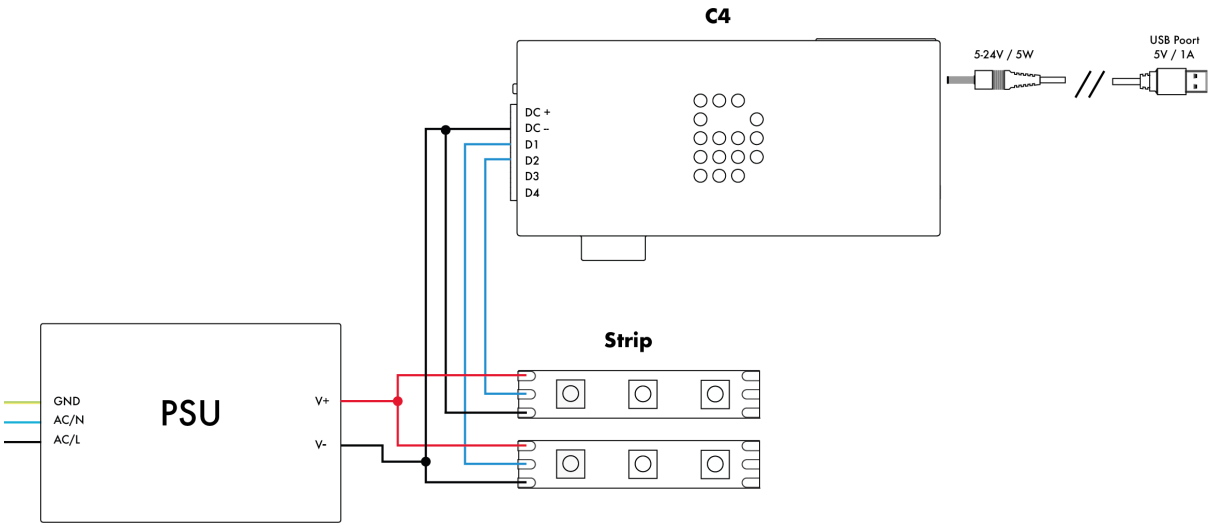

DO

If DC Jack is connected for powering the C4, the grounds between PSU and C4 need to be connected.

Use of trigger inputs (Extended license only)

The Analog trigger inputs can be used for N.O. push buttons, switches, 0-10 V dimmers, 0-10 V control signals from external devices (such as building management systems), or you can connect 50k Ohm linear potentiometers to the trigger inputs (see picture down below).
The DiGidot C4 Trigger input has following pinout:

1. Analog trigger 3
2. Analog trigger 2
3. Analog trigger 1
4. Ground

The DiGidot C4 TRRS Trigger cable has the following corresponding wires:

1. Red	=	Analog 1
2. White	=	Analog 2
3. Green	=	Analog 3
4. Black	=	Ground

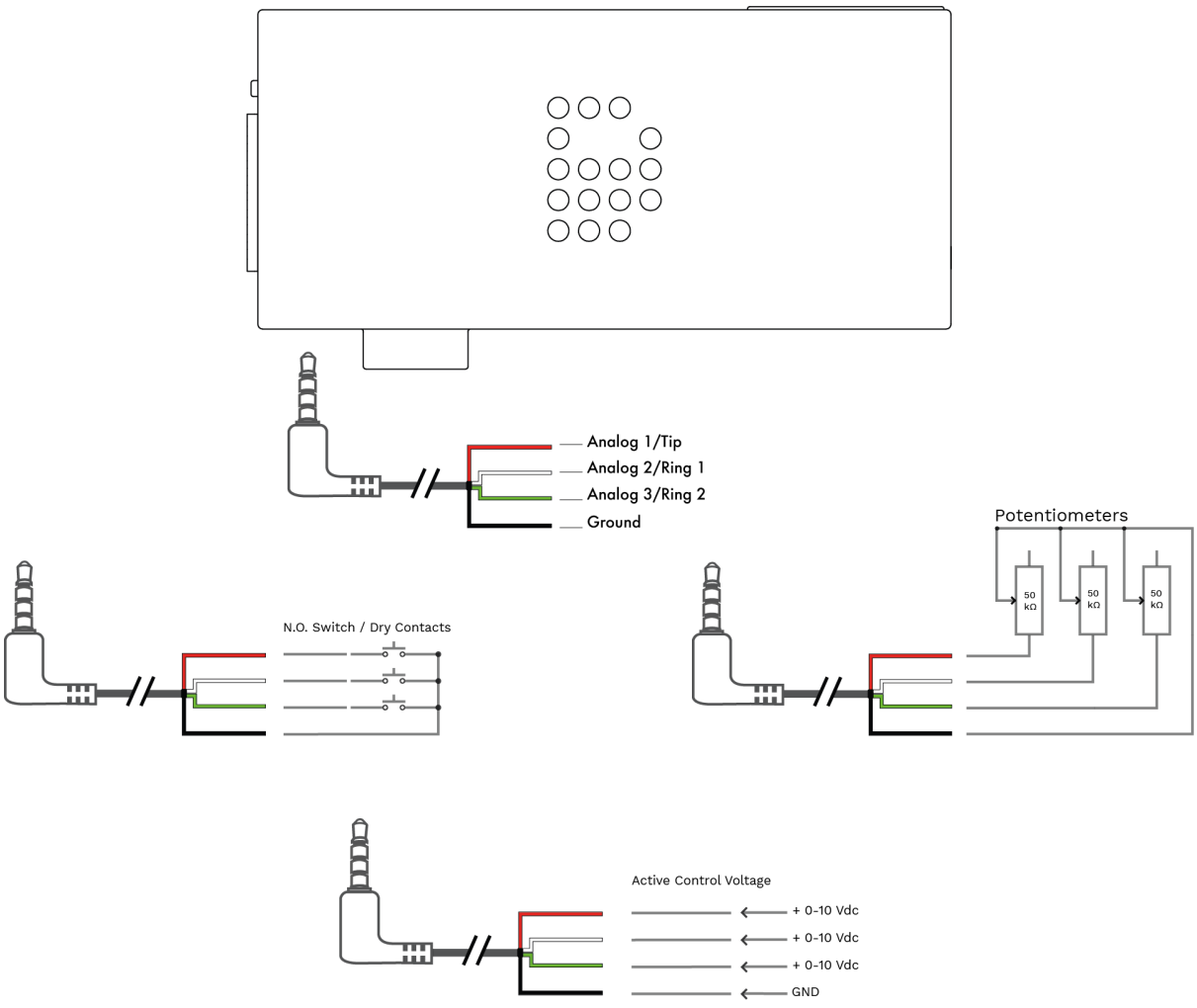

CONFIGURATION

Accessing the DiGidot C4

You can connect to the DiGidot C4 with a wired Ethernet connection or Wi-Fi.
The DiGidot C4 app is available for mobile devices in the App Store and Google Play.





Wired quick start

New DiGidot C4 controllers have an activated built in DHCP server as per default.
Accessing a new DiGidot C4 controller works as follows:

1. Connect the DiGidot C4 to a power source. Read chapter 'Connecting power' or choose one of following options:

Option 1 Connect DC+ and DC- to a switching power supply, rated 5Vdc up to 24 Vdc, that is able to output at least 5 Watts

Option 2 Connect the DC Socket, located next to the Ethernet ports to a 5 Vdc power source (USB port).

2. Use an RJ45 Network cable (one short network cable is supplied with every DiGidot C4) to connect the DiGidot C4 to a network port of a computer.

3. Open your internet browser (preferably Google Chrome) and go to http://10.254.254.254.

TIP: You can also go to interface.digidot.eu to access your device(s), but this requires an active internet connection.

In case an account has been created to access the DiGidot C4, the same username and password have to be used in the app.

Configuring computer for the built in web interface with a wired connection

To setup a wired computer connection, power up the DiGidot C4 and use a CAT 5 (or higher) RJ45 network cable to connect your DiGidot C4 to a computer.
Plug the network cable in one of the RJ45 network ports of the DiGidot C4 and into the computers Ethernet/UTP port.

NOTE: Please note that changing your Ethernet settings can prevent you from reaching the Internet and/or other devices in your network.
To stay connected to the Internet and use the online update and upgrade functions, it is required to use a computer with multiple network connections (LAN or Wi-Fi).
It's recommended to write down what your current network configuration is in order to restore these settings after you finished the configuration process if necessary.

Some laptops switch between Wi-Fi or Ethernet, in these cases you cannot have both connections simultaneously. This can be solved by using a third party Ethernet dongle.

On Windows computers go to:

Control Panel **>** *Network and Internet* **>** *Network and Sharing Centre* **>** *Ethernet* **>** *Properties* **>** *Internet Protocol Version 4 (TCP/IPv4)* **>** *Use the following network settings:*

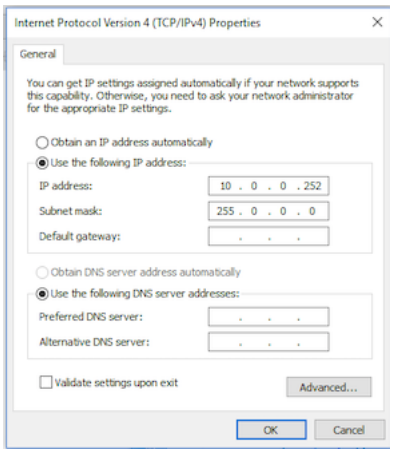

IP Address 10.0.0.1
The static IP address of your computer

Subnet mask 255.0.0.0
Network broadcast range of your computer

Gateway 0.0.0.0
Router for Internet access

On Mac computers go to:

System Preferences **>** *Network* **>** *Ethernet* **>** *Configure IPv4* **>** *Manually* **>** *Use the following network* settings:



Network Settings Values
IP Address 10.0.0.1
The static IP address of your computer

Subnet mask 255.0.0.0
Network broadcast range of your computer

Gateway (empty)
Router for Internet access

Your computer is now ready to access the DiGidot C4.
Open your web browser and go to http://10.254.254.254.

Configuring for DiGidot app access

You can get wireless access to the DiGidot C4 fast and easy by following these 5 steps.
There's no special configuration required for your mobile device, this option works straight out of the box.

Wireless quick start

1. Connect the DiGidot C4 to a power source. Read chapter 'Connecting power' or choose one of following options:

Option 1 Connect DC+ and DC- to a switching power supply, rated 5Vdc up to 24 Vdc, that is able to output at least 5 Watts

Option 2 Connect the DC Socket, located next to the Ethernet ports to a 5 Vdc power source (USB port).

2. Press and hold the on board button for 10 seconds to turn on the Wi-Fi. This will automatically setup your DiGidot C4 as a temporary access point. The status LEDs of the DiGidot C4 will turn blue-white when the access point is activated.

3. Install the free DiGidot app on your mobile device (this is optional) or go to step 4.

4. Connect your mobile device or computer to the DiGidot C4 Wi-Fi Network. Available DiGidot C4 networks are listed with their MAC Addresses, as shown on the DiGidot C4 product label for easy identification.

5. Start the DiGidot C4 app or open your internet browser and access your device(s) by browsing to http://172.16.0.1.

Device network settings for Art-Net

The device network settings can be changed in the integrated user interface. This is required in case you want to communicate with an Art-Net control device.

1. Log into user interface
The DiGidot C4 has a Built-in web-based user interface which you can access by using a web browser.
Once you have configured the IP settings on your computer, you can access the DiGidot C4 interface. Open your web browser, type http://10.254.254.254 in the address bar and press enter.

2. Configure device name and network settings
Home **>** *Settings* **>** *Network.*

You can change the IP Address and subnet mask of the DiGidot C4. The IP Address needs to be unique in your network to avoid IP conflicts.

The device name than will be shown in the network can be changed on this page on this page:

Home **>** *Settings* **>** *Device page*

Example of Network settings:

Device name:	My DiGidot C4
IP Address:	10.0.0.2
Subnet-mask:	255.0.0.0

NOTE: These settings are just an example in order to get the DiGidot C4 to work. Alternatively the DiGidot C4 can be integrated in an existing network (be sure to change your DiGidot C4 network settings to match your local network). For questions about network integration, consult a local IT or network specialist.

3. Wi-Fi settings (optional)

Home **>** *Settings* **>** *Network settings* **>** *set Wi-Fi mode to 'Access Point' or 'Connect to Wi-Fi'*

Before configuring the internal Wi-Fi of the DiGidot C4, note that sending Art-Net over Wi-Fi is strongly discouraged, because of instability, unreliability and speed of wireless networks.
Wi-Fi is intended for configuring the DiGidot C4, playback and triggering.
The Wi-Fi IP Address range cannot be the same as the range for Ethernet.

INTERFACE

The DiGidot C4 has a built in web interface for configuration and triggering options.
The interface can be accessed through a web browser by using a wired ethernet or Wi-Fi connection using the IP Address of the DiGidot C4 (default IP Address: 10.254.254.254).
You can also use our free DiGidot app for mobile devices with the same functionalities as the build in web interface.

Interface map

This map shows the internal menu structure of the DiGidot C4. Some menu items are only visible in the DiGidot C4 Extended.

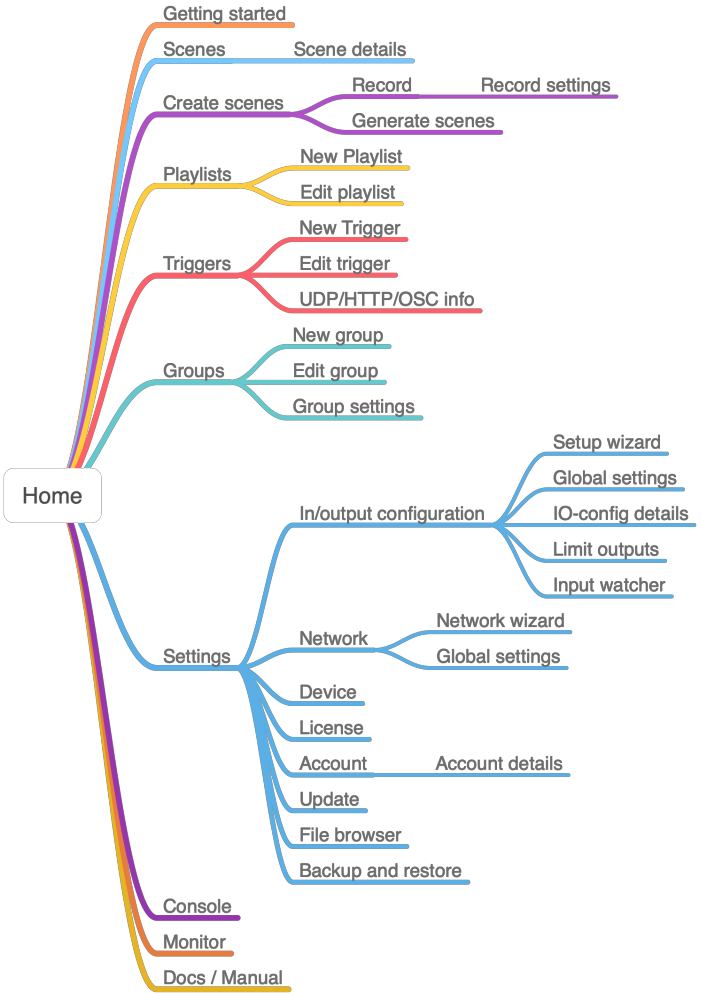

Getting started

Home **>** *Getting started*

In order get started quickly or if you're new to using the DiGiDot C4, we recommend using the Getting Started wizard from the Home menu. This wizard will guide you through all essential steps to get the DiGidot C4 up and running.
This wizard goes through following steps:

1. Network settings
2. Device positioning (in case of multiple devices)
3. Input/Output (IO) configuration
4. Security (Trigger security settings can be changed in the '**HTTP, UDP and OSC**' sub menu on the '**Triggers**' page)

Open the user interface and go to the '**Getting started**' wizard.
Follow the instructions carefully and complete the wizard in order to get your system up and running quickly. In case you need help, you can open the information windows by clicking the '**i**' icons.
When the Getting started wizard has been completed correctly, your DiGidot C4 controller is ready to use.

Scenes (DiGidot C4 Extended only)

Home **>** *Scenes*

A scene is a generated or recorded effect that can be played and triggered.
Here you will find an overview of all scenes, compatible with the selected devices (listed in the top bar).
Click on the scenes to start or stop playing.
Select the pop over menu (3 dots) in the top right, to play, download (web interface only), edit or delete scenes.

Create scenes

There are two ways to create a scene in the DiGidot C4 interface.

Record scene

Home **>** *Create scenes*

The record button will become active when an incoming signal is detected.
To start recording, click the red record button on the underside of the page.
A timer starts running until the record/stop button is clicked again.
When the record is completed, you can play and stop the recorded scene. A trimming slider can be used to adjust the beginning and end point of the record.
You can choose multiple options to save the record, such as:

Trim scene

Time based
Adjust the start and end time to trim the record to its desired length.

Frame based
Adjust the start and end frame trim the record to its desired length.

Find loop
This option detects if there is a loop in the record (within the trimmed section) and automatically creates a looped record.

Trim black
This option detects if there are any black frames at the beginning and end of the trimmed selection and trims the length of the entire record.

No effect
This will keep the original trimmed record.

Fade
This option creates a fading transition from the end to the start of the record. You can manually adjust the fading time before the record is saved.
Note that this option only appears when the record is long enough to generate this effect.

Pingpong
This option replays the trimmed record from beginning to end and then from the end to the beginning again.

In order to record from DMX you have to configure one or two DMX Input(s) in the I/O configuration.
Go to Home **>** *Settings* **>** *In/out configuration* **>** *Select a port and choose 'DMX Input'*

NOTE: The options above cannot be changed afterwards.
Please also note that the 8GB microSD card (when formatted) is automatically partitioned into two 4 GB partitions. One is being used as flash buffer for recordings and the other 4 GB partition is being used to store scenes and settings. Use only original industrial grade DiGidot microSD cards. Other memory cards will not work.

The average theoretical recording time limit with 8 universes is approximately 10 hours.

Record settings

Home **>** *Create scenes* **>** *Record settings*

On this page you can select and deselect the incoming universes that can be recorded.

Use Art-Net to start, stop and save records
This option allows you to trigger following record functions: prepare record buffers, start, stop and save records with an Art-Net signal.
To create an Art-Net trigger you need to specify a universe number, a channel number and a minimum and maximum DMX/channel value between 0 and 255, to determine when when the event should be triggered. These triggers can also be created manually on the 'Home **>** Triggers' page

Prepare buffers:	This will prepare the DiGidot C4 before recording. This is required before starting the record. We recommend preparing record buffers 1 second before starting to record.
Start record:	This will start recording. The status LED will become white/blue.
Stop Record:	This will stop recording. StatusLED will stop being white/blue.
Save record:	This will save the record and will create a scene. The scene name will be generated automatically.

NOTE: Art-Net triggers can be used without the use of the DiGidot C4 interface or app.

Fixed frame rate
If fixed frame rate is enabled (default) the DiGidot C4 will record at 62 fps. If the option is disabled, the DiGidot C4 will create a frame for each Art-Net/DMX message, this can be useful when your software is sending at a fixed frame rate for example. Please note that higher fps rates result in larger scene files and thus affects available memory. In most cases we recommend using fixed frame rate.

Select/deselect all
This option allows you to select or deselect all available input universes.

Select inputs to record
Check the universes that you want to record with your next recording.

Generate Scene (DiGidot C4 Extended only)

Home **>** *Create scene* **>** *Generate scene*

Scenes are generated based on one universe and are being copied to following universes and outputs, depending on your I/O configuration.
You can generate three types of scenes, such as:

Static color
This will generate a static color scene.

Color scroll
This option generates a color scrolling (chase) effect of multiple colors in a user defined order.
Two additional parameters can be set, such as speed of the effect and the width of the colors.

Test Scene
This option generates a predefined color scrolling (chase) effect which is useful to quickly test your setup.

Playlists (DiGidot C4 Extended only)

Home **>** *Playlists*

A playlist is a list that contains one or more scenes in a user defined order that are played according to a set of predefined parameters. Scenes contained in a playlist can also be triggered by “next” and “previous” triggers.
The parameters that can be defined are:

Scene order
When the scenes have been added to the playlist, you can drag and drop scenes in any order with the  icon.

Output action
In case that there are multiple DiGidot C4 devices present in your network, you can assign which devices have to play a specific scene.

Repeat
The number of times that a scene is played.

Duration
The playtime duration in which the scene is (re-)played.

Fade time
This is the transition time of the cross fade between scenes.

Infinity repeat
This option replays the complete playlist indefinitely.

Triggers (DiGidot C4 Extended only)

Home **>** *Triggers*

The DiGidot C4 Extended is able to use a wide variety of triggers to control various functions.
Triggers can be used to control following events: Play scene(s), Play playlist(s), Action list, Stop, Next, Previous, Speed, Brightness, Record, Reset, send UDP message, send OSC message, etc.

There are two options for triggering;

Triggers: This is the standard way of triggering events, based on an ‘if this that that’ logic.
Example 1: If the circuit of dry contact 1 (analog input 1) is closed, start playlist 1.
Example 2: If channel 10 of Art-Net universe 1 is between value 100 and 255, play scene at brightness 50%.

Linked triggers: Link inputs to effects, such as speed, hue, saturation, etc.
Example 1: Link an analog input permanently to control the playback speed.
Example 2: Link an incoming OSC channel to brightness.

Creating triggers

Click **+** to create a new trigger and choose from the following “If this..” trigger options.
You need to select the device(s) where the trigger needs to be activated.
On the right side of the screen, you need to select the device where the action must be executed.

This can be done by clicking the blue top buttons in the ‘If this.. Then..’ row, that will show a list of available devices in the network.
After configuring a trigger, click ‘**SAVE**’, enter a trigger name and save it. The newly created trigger is then listed in the ‘Triggers’ overview.

Analog triggers

Home **>** *Triggers* **>** *select ‘+’ to add a trigger* **>** *select ‘Analog’*

The DiGidot C4 Extended has three analog inputs that can be used to control or trigger various events. Please make sure that the analog inputs are properly connected before you start using them. Before creating analog triggers, it’s advised to calibrate the analog inputs.

Analog input Calibration

For the analog input calibration it is required that the analog inputs are wired properly to the incoming analog signal and that the controlling device (if applicable) is powered.

Go to: *Home* **>** *Triggers* **>** *Click the three dots in the top right blue bar* **>** *Calibrate analog*

Make sure you are working on the correct device or select the right device from the top selection bar. Follow these steps to calibrate the analog inputs:

1. Send the maximum control value of analog input 1 (e.g.: turn the 0-10V dimmer up to its maximum) and press the ‘SET MAXIMUM’ button.

2. Send the minimum control value of analog input 1 (e.g.: turn the 0-10V dimmer down to its minimum) and press the ‘SET MINIMUM’ button.

Repeat these steps for analog inputs 2 and 3 (when they are in use). Use the sliders on the bottom of this window or enter specific values to manually adjust the analog input ranges.
When all inputs have been calibrated, press ‘SAVE’.

Creating analog triggers

There are four different ways to use the analog inputs:

- Push button or switch
- 0-10V dimmer
- 0-10V control signal from an external control system
- Potentiometer (50kΩ)

If this..

This menu shows the available input options.

- Analog channel: Select the analog channel 1-3 that you want to use for triggering.
- Analog type: Select the type of analog trigger. Use a dry contact or analog value.
- Event: Define the trigger event/state and optional delay or duration of the event.

Then..

This menu shows the available events that can be configured.

- Select the devices that you want to trigger by this action.
- Select the action type and action parameters, if applicable.

When you've finished your trigger setup, click 'SAVE' to store your trigger settings.

Art-Net or DMX triggers

Home **>** *Triggers* **>** *click '+' to add a trigger* **>** *select 'Art-Net or DMX'*

You can use Art-Net and/or DMX to trigger various actions.

Art-Net triggers (default)

If this..

- Input universe: Select the input universe of the incoming signal.
- Channel: Select the channel that is used for this trigger.
- Minimum: Define the minimum channel value (0-254)
- Maximum: Define the maximum channel value (1-255).

Then..

This menu shows the available trigger actions that can be configured.

- Select the devices that you want to trigger by this action.
- Select the action type and action parameters, if applicable.

DMX triggers

How to configure ports as DMX in?

You can configure the ports D1-D4 to one or two DMX inputs.

In case that port D1 & D2 and/or D3 & D4 are available (if no SPI protocol has been configured for these ports), you can choose which ports you want to configure as DMX input.

If all ports are already in use you have to re-configure the input/output configuration.

Home **>** *Settings* **>** *In/out configuration* and adjust I/O setting per port.

NOTE: DMX uses two lines for data; DMX + and DMX - and therefore requires two DiGidot C4 ports.

If this..

- Select DMX port: Select the DMX port where the trigger signal is coming from.
- Channel: Select the channel that is used for this trigger.

  Minimum: Define the minimum channel value (0-254)

  Maximum: Define the maximum channel value (1-255).

Then..

This menu shows the available trigger actions that can be configured.

- Select the devices that you want to trigger by this action.
- Select the action type and action parameters, if applicable.

Power up

Home **>** *Triggers* **>** *select '+' to add a trigger* **>** *select 'Power up'*

This trigger will perform an action as soon as the DiGidot C4 is powered and booted or when the device is rebooted after performing a system reset.

If this..

- Automatically starts after DiGidot C4 start up

Then..

This menu shows the available trigger actions that can be configured.

- Select the devices that you want to trigger by this action.
- Select the action type and action parameters, if applicable.

Onboard button

Home **>** *Triggers* **>** *select '+' to add a trigger* **>** *select 'Button'*

The onboard button of the DiGidot C4 can be programmed to trigger various actions.

This feature is very useful for mobile applications and demonstration setups.

If this..

- Button event: Select the preferred button event.
- Delay/duration (optional): Add a delay or duration in milliseconds to a button event.

Then..

This menu shows the available trigger actions that can be configured.

- Select the devices that you want to trigger by this action.
- Select the action type and action parameters, if applicable.

Time/date

Home **>** *Triggers* **>** *select '+' to add a trigger* **>** *select 'Time/date'*

The DiGidot C4 has a build-in clock to trigger various time based actions.
Every time the interface is loaded, the browser/app time will be used to synchronize the DiGidot C4 time and date. Once the time and date are set, the on-board battery will keep the internal clock running.
Automatic sync of time and date can be disabled in the device settings and allow for manual date/ time override.
Go to: *Home* **>** *Settings* **>** *Device* **>** *deselect 'Sync time and date automatically*

If this..

Select '**TIME PERIOD**' for triggers that have to be active during a specific time frame.
E.g. When the DiGidot C4 is powered within a time frame defined in this trigger, it will execute the associated action automatically.

TIME PERIOD:

- Every: Repeating frequency of this trigger, e.g. every 'day' or every 'week' etc.
- Start: Define the time that marks the beginning of the time frame.
- End: Define the time that marks the end of the time frame.

Select '**TIME**' for triggers that have to be activated on specific times. These triggers will be fired only once when the defined time is reached. The DiGidot C4 will not activate the trigger retroactively.

TIME:

- Every: Repeating frequency of this trigger, e.g. every 'day' or every 'week' etc.
- Time and period fields: Define a date, time, period, etc. (multiple inputs possible depending on chosen frequency).

Then..

This menu shows the available trigger actions that can be configured.

- Select the devices that you want to trigger by this action.
- Select the action type and action parameters, if applicable.

Digital trigger commands

You can send specific commands from external systems and devices to trigger various actions. These digital triggers are very useful for system integration and automation.

This also allows other developers to incorporate control over the DiGidot C4 in other software programs.
If you need further API information, please contact us.

OSC

Home **>** *Triggers* **>** *select '+' to add a trigger* **>** *select 'OSC'*

OSC (Open Sound Control) is a protocol that is often being used in audio and video applications in order to send MIDI over a network. Due to the open and easy to use standard and various low cost OSC applications to create user interfaces, this protocol is ideal to be used in lighting applications.

There are various third party OSC applications that reported to work in combination with the DiGidot C4. The most commonly used app is TouchOSC from hexler.net.

In order to be able to create OSC triggers, they must be enabled first. This can be done by creating an OSC trigger and press the '**enable**' link or go to:
Home **>** *Triggers* **>** *click on the 3 dots in the top right blue bar* **>** *select 'HTTP, UDP and OSC'* **>** *Enable OSC triggers*

Select the OSC tab to view settings and trigger examples.

Add an OSC trigger

An OCS trigger can be created in two ways:

If..

1. Learn an incoming OSC Address
   > Press the '**LEARN**' button and send the Address from an OSC app or software.
   Note that the OSC sending application must be connected to the C4 network.

2. Enter an OSC Address manually
   > Enter the same Address that is used by to the OSC app or software.

Then..
This menu shows the available trigger actions that can be configured.

- Select the devices that you want to trigger by this action.
- Select the action type and action parameters, if applicable.

After saving the OSC trigger it will be listed in the Triggers overview. Use the copy button in the trigger bar to copy the OSC command and paste it to the desired destination.

Address for OSC editor
If an OSC Address has been entered in the trigger first, the same Address needs to be copied in the OSC editors address field (deselect 'Auto' in TouchOSC).

UDP

Home > Triggers > select '+' to add a trigger > select 'UDP'

In order to be able to create UDP triggers, it must be enabled first. This can be done by creating a UDP trigger and press the '**enable**' link or go to: *Home > Triggers > click on the 3 dots in the top right blue bar > select 'HTTP, UDP and OSC' > Enable UDP triggers*

Select the UDP tab to view settings and trigger examples.

Add a UDP trigger

Home > Triggers > select '+' to add a trigger > select 'UDP'

A UDP trigger can be created in two ways.

If..

1. Learn an incoming UDP message
    - Press the '**LEARN**' button and send the message from an UDP app or software.
      Note that the UDP sending application must be connected to the C4 network.

2. Enter an UDP message manually
    - Enter the same message that is used by to the UDP app or software.

Then..

This menu shows the available trigger actions that can be configured.

- Select the devices that you want to trigger by this action.
- Select the action type and action parameters, if applicable.

After saving the UDP trigger it will be listed in the Triggers overview. Use the copy button in the trigger bar to copy the UDP command and paste it to the desired destination.

HTTP

In order to be able to create HTTP triggers, they must be enabled first. This can be done by creating a HTTP trigger and press the '**enable**' link or go to:
Home > Triggers > click on the 3 dots in the top right blue bar > select 'HTTP, UDP and OSC' > Enable HTTP triggers

Select the HTTP tab to view settings and trigger examples.

If..

Use the IP Address of the selected device In order to send the HTTP command to the right device.

Then..

This menu shows the available trigger actions that can be configured.

- Select the device(s) that you want to trigger by this action.
- Select the action type and action parameters, if applicable.

After saving the HTTP trigger it will be listed in the Triggers overview. Use the copy button in the trigger bar to copy the HTTP command and paste it to the desired destination.

Internal task

Home > Triggers > select '+' to add a trigger > Internal task'

This trigger can be used to trigger events when the DiGidot C4 is in a specific status, such as playing a scene or when in idle state.

If this..
Define the condition of an internal task which upon a trigger needs to be fired.

- Select an internal task such as scene or to Art-Net
- Select a status of an internal task which triggers the event
  The idle status is defined as; ready to execute tasks, not playing a scene and no incoming Art-Net or DMX Signal is detected.

Then..
This menu shows the available trigger actions that can be configured.

- Select the device(s) that you want to trigger by this action.
- Select the action type and action parameters, if applicable

Sunrise / sunset

Home > Triggers > select '+' to add a trigger > Sunrise / sunset'

Sunrise and sunset triggers can be used to trigger evens when the sun rises or sets. The DiGidot C4 will calculate the precise local sunrise or sunset time, based on GPS coordinates (longitude and latitude). It is also possible to program an offset to these events in order to start the trigger before or after the sun rises or sets.

If this..

Enter location
There are two ways to enter the location of the project.
The first option is the online location finder. Enter the location, city and country for example and press enter. The Interface will provide the latitude and longitude and current sunrise and sunset time for this location. This option requires an internet connection.

The second option is the off line mode where the latitude and longitude can be entered manually or where you can choose from a list of popular cities. This is recommended when no internet access is available or when the google result is not accurate.

Choose one of the following options for this trigger:

Options

- Sunrise
- Sunset

It is possible to add or subtract time in minutes from the sunrise or sunset time by entering a positive or negative amount of minutes.

Then..

This menu shows the available trigger actions that can be configured.

- Select the devices that you want to trigger by this action.
- Select the action type and action parameters, if applicable.

NOTE: You can make combinations of multiple triggers to control specific actions.
In order to so, select 'ADD INPUT' in the 'If this..' menu. Note that only the combination of all selected input triggers will trigger the action.
This feature is still in development and not yet fully supported for all combinations, please make sure you're running the latest firmware and contact us for further information.

Creating linked triggers

Home **>** *Triggers* **>** *Linked triggers*

Linked triggers are used to link input triggers to actions with variable values such as linking an analog input to the master brightness.

On this page it's possible to link the trigger inputs on the left to the effects and actions on the right. Simply select an input and an action to connect a trigger permanently. The established link is visualized by a connected line between the two items.
For the analog, Art-Net and DMX inputs it's required to set a minimum and maximum input value. Some triggers and some actions require further configuration, such as OSC and UDP where custom messages can be set.

NOTE: The amount of triggers that you can generate is limited due to available memory. Available memory is affected by the license, amount of configured universes, amount of actions, scenes that are playing, etc. In any case, the maximum amount of triggers is around 25. If too much triggers are created, this can result in memory overload and will cause a device crash. In such cases, it's best to remove the microSD card, make a copy of the microSD card, delete the contents of the triggers folder and insert the microSD card again. New triggers can be created but you should create less triggers than before.

Groups

Home **>** *Groups*

This function allows you to create specific groups of DiGidot C4 controllers. This makes the configuration, identification, testing, restarting and organizing specific parts of your project or installation a lot easier.

Add a group

Home **>** *Groups* **>** *click the '+' icon*

Input fields

Title:	Enter a name for this group.
Select devices:	Check all devices that you want to add to this group.
User rights:	You can limit access of specific groups to various user levels.

(This feature is still in development and will be updated soon.)

Group settings

Home **>** *Groups* **>** *submenu: Group settings*

Input fields

Auto select group at startup:	In the group settings you can set up a device or group that is selected in at the startup of the app. This can be useful if you create an "user" account that should only control those devices.
Hide single devices:	When you enable this option, single devices will be hidden in the "My Devices" overview (select-box in the top bar). Groups will not be affected by this option.

Monitor

Home **>** *Monitor*

In the Monitor function you will find relevant information such as Ping time, Status, MAC-Addresses, IP Addresses and Wi-Fi status and so forth. This can be helpful when setting up your network or for troubleshooting.

Ping

Ping shows the network message response time.
When the ping light is green, the network connection is working.
When the ping light is red the DiGidot C4 is not responding. Click on the "timeout" text to get more information about the timeout session.

Status

Definitions of device statuses:

- Playing [scene name]: Device is playing a scene or playlist.
- Scene FPS
- Incoming Art-Net FPS

Analog

This is the incoming values of the analog ports.

Name

This is the device name.

MAC Address
This is unique the device MAC Address.

IP Address
This is the device IP Address.

Wi-Fi
This is the status of the onboard Wi-Fi module.

Universe(s)
This shows the configured universe(s) that the DiGidot C4 listens to. There are two statuses:

- Red numbers indicate that no Art-Net data present.
- Green numbers indicate that Art-Net data is present.

Click on the device universes to open the Art-Net Watcher window, to monitor the incoming channel values.

Port
This shows which ports have been configured as an output.
If you click on a port, it will highlight the DiGidot C4 output until you click again.

Actions
Restart: will restart all devices that are currently selected and displayed on the Monitor page.
Highlight: will highlight all configured outputs of all selected and displayed devices on the Monitor page.

To select more or less devices, click on the “ALL DEVICES” button (select-box in the top bar) and select the preferred device or group.

Settings overview

Home **>** *Settings*

This page shows all settings and device configuration items.

Inputs & outputs configuration (manual configuration)

Home **>** *Settings* **>** *In/out configuration*

On this page you can manually configure the inputs and outputs.

Choose the output type (or DMX input) for these ports. Then click the blue + icon of each port to generate a universe. To edit the output options, click the universe item.

The DiGidot C4 is able to output one SPI protocol type simultaneously. If you select a SPI protocol for one port, this protocol will be used for all other output ports.
You can however make a combination with ‘DMX input’ or ‘DMX output’.
Combining ports example:

Port D1 is set to DMX out and will automatically be combined with port D2, because 2 data lines for a (balanced) DMX signal are required. You can now select a protocol for D3+D4.

NOTE: The DiGidot C4 starts to count universes at 0 (zero)! Some softwares or consoles may start counting at universe 1.

TIP: Additional tools available!
In the right top menu you will often find additional tools under the button.

LED Configuration wizard
This wizard guides through a few simple steps to select the IC protocol and and defines which channels are used to control the outputs. In order to help you to define the right amount of control channels, you can use the '**calculate output**' tool in step 2.

If you have used the '**Getting started wizard**', you don't need to go through this wizard, unless you want to change the output/LED configuration again.

Autocomplete configuration
Use this tool to copy the configuration of the first port of the first device to a the selected ports/ devices. The interface will show various autocomplete options, depending on your system setup.

Global configuration
This page offers advanced configuration item options that apply to all selected devices.
Such as;

- Gamma Correction
- Color profile
- Fallback options
- IP Address filter

Input watcher
The input watcher is a useful tool that monitors incoming control signals. You can switch between:

- Art-Net: you can select a specific universe that you want to monitor
- DMX: switch between the inputs if you have configured one or more ports as DMX In.

Limit outputs
On this page you can set the master brightness, the brightness limiter and the adaptive power limiter.

- **Brightness limiter**
  This option limits the individual channels to a specific percentage. This means that every channel or LED will never exceed this percentage.

  E.g.: Limiting brightness to 50%, means that all individual channels can never exceed 50% but the control range per channel will remain the same. Effectively the percentage is applied to the input value for each channel.

- **Adaptive power limiter**
  This option limits the total average output of all channels combined to a specific percentage in order to decrease total power consumption. Individual channels my still output up to 100%.

  E.g.: Limiting power to 50% means that half of the channels can output 100% and the other half at 0% or all channels at 50%, etc.
  In case you would try to output all channels to 75%, the output of all channels would be automatically limited to a total 50%, but will maintain ratios relative to each other.

Delete configuration
Deletes all IO configuration settings of selected devices.

I/O detail page

Home **>** *Settings* **>** *In/out configuration* **>** *Universe item*

Click on Port D1-D4 to select or change the output protocol. Click on the '**+**' symbol to add a universe to each port. Select each universe to change following settings.

Channels/Pixel segments: Define the number of output channels or number of pixel segments.
Universe: Assign a universe number as input.

Further configuration options will be shown when you activate the '**Show advanced settings**' option.

Advanced IO config

Start-channel
This option allows you to enter an offset value of the starting channel that this universe listens to. By entering a start channel (0-511), all channel data before this channel offset will be skipped.

Example
Goal: You want to use channels 100 up to channel 200 as output channel 0-100.
Configuration settings will be as follows:

- Start channel is set to 100.
- Channels is set to 200.

Explained: First, the start channel will shift 100 channels of the input. This will skip the first 100 channels of the universe. Then set the channels to 200, because 200 channels are required, starting after the first 100 skipped channels.

Create segments
This option allows to combine multiple channels or LEDs in order to become one pixel/segment. It's recommended to use this option only if the amount of control channels needs to be reduced.

Segment type **>** Select a segment type from the dropdown menu.

- No segments - Disables segments (Default)
- Create segments - Allows to create your own segmentation
- RGB(W) LED segments - Link multiple LEDs together (e.g.: channel 1&4&7, 2&5&8, ...)
- Single color segments - Groups channels together (e.g.: channel 1-3, 4-6, ...)

Gamma correction

Gamma correction adjust the overall brightness of the output. This option is used if you want to display real looking videos instead of high saturated effects.

Color profile

Rearrange the LED color order, for example from RGB to BGR. You can select a few standard conversion profiles or create your own Custom profile. This might be required for some LED products. The DiGidot C4 uses the default color order from the technical documentation of a selected IC/SPI protocol.

Fallback color

This function allows to select a color that will be send to all output channels as soon as no Art-Net signal is detected.

Color

Enter a RGB value between 0 and 255 per LED channel or use the color picker to select a color easily. If you use the color picker, you can also adjust the saturation and brightness by adjusting the sliders underneath. After selecting the fallback color, hit the ✓ button in the center of the color picker to confirm your selection.

Timeout

Enter a delay/timeout in ms (milliseconds) when the fallback color becomes active after signal loss.

Advanced input

Further universe specific settings can be changed;

- **Only accept Art-Net from IP Address**: enter a dedicated IP address that this universe listens to.
- **Analog dimming**: select one of the three analog inputs that will control the overall brightness of this IO configuration item.
- **16 bit input**: When sending 16 bit data to the DiGidot C4, two input channels are used for one color channel. If your IC does not support 16 bit and you want to convert 16 bit to 8 bit, please enable this option. If your input is 16 bit and your IC is too, it will be done automatically.
- **Second input (HTP merge)**: This wil merge the selected universes together and transmit the merged signals to the designated output. Enter the desired universe, start channel and the amount of channels you want to merge.
- **Output options:**
  - **Reverse Universe:**
  - **Bypass master dimmer:** Enable **if you want this output not to be dimmed by a master dimmer or brightness trigger.**
- **Max time until resend:** When no Art-Net is received within a given time the current output is resent to the IC's (LEDs). This is used to prevent data issues and IC timeout functions from happening because some IC's will switch to a default color or sequence when no SPI is received for a certain duration. This may also results in a decrease of frame rate (FPS).

Reset this value to its default by pressing delete > generate a new universe again by selecting the blue + button of the specific D port.

When you are finished adjusting the advanced options, click ‘save’ to store the settings.

TIP: In order to quickly test your outputs you can toggle all ports on to full white when clicking the bulb icon.

Network

Home **>** *Settings* **>** *Network*

This page shows a tab for both Ethernet (wired) and Wi-Fi (wireless) network related settings of the DiGidot C4.

MAC Address
This is the unique the device MAC Address. This address cannot be changed and is being used for identification and network communication.

Ethernet configuration

IP Address
The ethernet IP Address of the DiGidot C4

Subnet-mask
Network broadcast range of your device

In case you’ve changed any ethernet settings, click the ‘SAVE’ button to store them.

Wi-Fi configuration

The DiGidot C4 has a build-in Wi-Fi module which is able to make different types of wireless connections.

Enable ethernet DHCP
Enable or disable the DHCP server. When enabled the DiGidot C4 will assign IP Addresses to devices that connect trough ethernet.

Wi-Fi mode
There are three options for Wi-Fi mode.

1. Off: this disables the internal Wi-Fi module.
2. Connect to Wi-Fi: The DiGidot C4 will connect to another Wi-Fi network. If the Wi-Fi network is secured, you need to enter the network password.
3. Access Point: The Access Point mode will create a Wi-Fi access point that you can access with your mobile device or computer.

Access Point
The Access Point mode will create a Wi-Fi access point that you can access with your mobile device or computer.

IP Address
The Wi-Fi IP Address of the DiGidot C4

Subnet-mask
Network broadcast range of your device
Gateway
The gateway of the network

Wi-Fi name (SSID)
Wi-Fi network name

Wi-Fi security
Wi-Fi security protocol can be set to open or secured (WPA2).

Password
Wi-Fi password (minimum of 8 characters)

Hide SSID
Hide or show the Wi-Fi network name when devices search for Wi-Fi connections. When hidden you can only connect to the acces point by manually entering the SSID.

Channel
Wi-Fi channel can be set between 1 and 14 or you can choose for ‘auto’.

Enable DHCP
Enable or disable the DHCP server. When enabled the DiGidot C4 will assign IP Addresses to devices that connect to the access point.

DHCP start IP Address
This is the starting IP Address of the IP Address range that the DiGidot C4 can assign to other devices in the network.

DHCP end IP Address
This is the last IP Address of the IP Address range that the DiGidot C4 can assign to other devices in the network.

Enable BSSID
Enable the use of BSSID

Access Point settings example

IP Address:	172.16.0.1
Subnet-mask:	255.0.0.0
Security Wi-Fi:	Secured
Wi-Fi password	123456789
Wi-Fi name:	DiGidot C4 Wi-Fi
Wi-Fi channel:	Auto
Hide SSID:	Disabled
Enable DHCP:	Enabled
DHCP start IP Address	172.16.0.2
DHCP end IP Address	172.16.0.30
Enable BSSID	Disabled

Connect to Wi-Fi

The DiGidot C4 will connect to another Wi-Fi network. If the Wi-Fi network is secured, you need to enter the network password.

Select a network

This shows a list of available Wi-Fi networks found by the DiGidot C4.
After selecting a network, you will be asked to enter the network password in case it is protected.

Static IP

Enable the option to fill in a static IP Address. When disabled the DiGidot C4 will use DHCP to get an IP Address from the network.

IP Address

The (static) Wi-Fi IP Address of the DiGidot C4. Make sure it's in the same IP Address range as the network you are connecting with.

Subnet-mask

Network broadcast range of your device

Connect to Wi-Fi settings example

Select a network:	HomeNetwork
Password:	HomeNetworkPassword
Static IP:	Disabled

NOTE: Avoid Interference with Wi-Fi

The following items can cause interference with the Wi-Fi signal:

- Microwave ovens
- Direct Satellite Service (DSS) radio frequency leakage
- Electrical installations such as power-lines, electrical railroad tracks and power-stations
- Wireless devices that operate in the 2.4 GHz range.

Do not install this device in metal or aluminium cabinets when you want to use direct Wi-Fi communication.

If you have problems with your DiGidot C4 communication, change the channel that your device is using for Wi-Fi or switch to Auto-Channel.

Device

Home **>** *Settings* **>** *Device*

This page shows settings of the DiGidot C4.

Device name
The name of the device by which it can be identified

Status LEDs
Disabled/enable the status LEDs.

Ethernet LEDs
Disabled/enable the ethernet LEDs.

Time settings (extended only)
It's possible to synchronize the time of the computer or smart device with the DiGidot C4 when loading the interface. If disabled you can manually enter a time and date. The time can be used for triggering scenes. Once the time and date are set, the on-board battery will keep the internal clock running.

Actions

- **Restart** - Restarts the DiGidot C4
- **Format SD** - Formats the microSD card inside the DiGidot C4 (extended only)

License

Home **>** *Settings* **>** *License*

On this page you can view the license(s) of your DiGidot C4 device(s).

License upgrade

Click the 'Buy license' and follow the instructions.
It's also possible to buy a license upgrade online, visit www.digidot.eu, create an account, register your device(s) and upgrade from the my devices tab at my account page.
Another option quick option to upgrade a DiGidot C4 is to use your smart device camera, scan the QR code on the DiGidot C4 device label and follow the the link to our website.

Having trouble upgrading your DiGidot C4 license?

Detailed updating instructions can be found on our website.
You will need your device QR code or the MAC-Address, serial number and your customer/company details for the upgrade procedure.

Having trouble upgrading your DiGidot C4? Please contact us at support@digidot.eu.

NOTE: If an immediate upgrade is required, please choose Credit Card, PayPal, iDeal, SOFORT Banking or Bancontact during the upgrade check out process. Other payment options will take a few days to process after the payment was completed.

Offline upgrade

The DiGidot C4 can be upgraded at any time, even when it doesn't have internet connection.
In order to upgrade your device(s) follow these steps:

1. Write down the MAC Addresses and serial number, listed on the product label.
2. Visit our website www.digidot.eu on a computer or smart device with internet connection.
3. Login to your account or create an account on our website.
4. Go to 'My devices' and select the devices based on MAC Addresses that you want to upgrade. If you have not yet added your devices to your DiGidot account, you can enter the MAC Address and Serial Number or Product Key and click the 'Add device' button or the 'Scan QR Code' button if your device has an on board camera.
   Another option is to use your smart device on camera mode, photograph the QR code on the DiGidot C4 device label and follow the the link to our website.
5. Then select an upgrade option for your device. Then complete the checkout.
6. After the payment is done, you can view your device again and download the license key.
7. Open the file and copy the license key text.
8. Go to the DiGidot C4 interface and go to settings **>** license. Then toggle the option for the offline upgrade. A text field will appear. Paste the license key in the field and then click 'upgrade'.

Account

Home **>** *Settings* **>** *Account*

This page allows to create accounts by enabling the accounts option. A popup will appear to create an 'admin' account. These login credentials will be asked if you log in to the DiGidot C4.
After the 'admin' account is created, it's possible to create accounts with different access levels. This can be used to restrict access to some parts of the interface for some users. A user for example may only playback scenes and playlists. When a user (with 'user' rights) logs in, the user will automatically be redirected to the scene page.

Interface

Home **>** Settings **>** Interface

This page offers a few user interface related options. These settings are stored in your browser or DiGidot C4 app.

Theme	Switch from Light to Dark color mode when this is preferable.
Developer mode	This mode adds the 'Console' menu item to the Home page.

> Console opens a command editor which should only be used by advanced users or if instructed by DiGidot support.

Update

Home **>** *Settings* **>** *Update*

When there is an internet connection, the user interface will automatically show if a firmware update is available. Please note that it is possible to update multiple devices at a time. Before updating please make sure that all connected devices have the same firmware version, that all devices are all switched on and connected by wired Ethernet. Follow the update instructions from the interface.

Offline update

When no internet connection is available, you can download the latest update from our website and then manually upload it to the DiGidot C4.

Open your web browser and go to the following address: http://<ip-address of the DiGidot C4>/fwupdate.htm. Click the “Browse“ button and locate the update file. Then Click “update” to start the update process (this may take a few minutes).
After the update is completed the DiGidot C4 status lights will return to idle state, fading blue to light blue.

By default the IP Address of the DiGidot C4 is 10.254.254.254. When you have configured an IP Address you can use that IP Address as well.

Backup and restore

Home **>** *Settings* **>** *Backup and restore*

The DiGidot C4 has a backup feature that allows to back-up the device settings from multiple devices. The backup will save all of accounts settings, network settings and input and output settings and triggers. Please note that all information on the microSD card such as scenes, playlists and app settings are not backed up. Those files can be backup by removing the microSD card from the DiGidot C4 and copying it manually to a computer.

TIPS & TROUBLESHOOTING

Standard troubleshooting checklist

1. Double check all cables and connections.
2. Is the DiGidot C4 powered correctly?
3. Are the LEDs powered correctly?
4. Are all power supplies connected correctly to your mains power supply.
5. Is your network setup done correctly?
    - Prevent IP Address conflicts
    - Make sure that the subnet mask range is set correctly and that all IP Address are set within the appropriate range.
6. Are the inputs and outputs configured correctly?
    - Make sure that the correct IC/SPI protocol is configured.
    - Make sure that input and output matches the system setup.
7. Is your ground (DC-) from the DiGidot C4 output terminal connected to all the grounds of the LED products power supplies?

Status LEDs

There are several states of the device. Different states are shown using both the top and the side status LEDs of the DiGidot C4.

Definition of status light indicators:

	Light colors	Category	Explanation
	Fading blue-cyan light	Informative	The DiGidot C4 is Idle with a license
	Fading blue-green	Informative	The DiGidot C4 is receiving Art-Net
	Fading blue-magenta	Informative	The DiGidot C4 is playing a scene
	Fading blue-white	Informative	The DiGidot C4 is recording or processing a scene
	Fading green-off	Informative	Settings successfully stored or device successfully discovered
	Fading white-off	Informative	The DiGidot C4 is updating the Wi-Fi firmware
	Fading yellow-off	Informative	Preparing factory reset, keep button pressed until fading stops
	Blinking red for 1 second	Error	Failed saving settings or an error has been encountered.
	Alternating red	Error	The microSD card must be formatted
	Alternating blue-red	Error	The DiGidot C4 system is frozen, a reset will be performed
	Alternating red-yellow	Error	The internal battery is empty or has a problem
	Alternating red-white	Error	The DiGidot C4 has crashed, a reset will be performed

NOTE: In case of a Battery Error: Both top- and side status lights are alternating from yellow to red for 3 seconds, contact DiGidot for further instructions.

Network status lights

Ethernet left LED (orange or green) - Link established
Ethernet right LED (blinking green) - Data transfer active

NOTE: In case that the status lights are not lighting up when the device is powered and connected to a network, the status lights may be switched off in the user interface.
Open the user interface and go to *Home* **>** *Settings* **>** *Device* to check and switch them back on again.

No output signal from DiGidot C4

Make sure that:

- the DiGidot C4 is powered.
- master brightness, port limiters are not set to zero.
- the HSV filter is not set to black.
- the inputs and outputs are configured.
- the scene is compatible with the outputs.
- In case your data cable between the DiGidot C4 and your first LED/IC is longer than 2 meters (6.5 ft), please reduce this length to an absolute minimum and check if this solves the problem. If the controller(s) now output correctly, the data cable runs were too long for your setup.

DiGidot C4 not receiving Art-Net

Make sure that:

- the DiGidot C4 is powered and is properly connected to the Art-Net console/computer.
- incoming Art-Net signal on the status lights located on the top and side of the DiGidot C4. When the status LEDs are green with blue it's receiving Art-Net signal. (see the product explanation and status lights explanation).
- the network, input and output configuration of the DiGidot C4 device is setup properly.
- the computer/device that is sending Art-Net is set up to match the network settings.
- the computer/device that is sending Art-Net is set up to match the universe inputs.
- the Art-Net status can also be checked in the interface on the Monitor page.

Art-Net software doesn't recognize the DiGidot C4

Make sure that:

- the DiGidot C4 powered and properly connected to the Art-Net console/computer.
- in order for the DiGidot C4 to be discoverable for any software, you need make sure that the network and one or more output(s) have been configured properly.
- the DiGidot C4 controller is reported to work with most well known Art-Net consoles and softwares. Some Art-Net consoles only work in the 2.0.0.255 range. Please configure your device in the same range if necessary.

In case your console or software continues to fail to discover the DiGidot C4, please contact DiGidot support.

Factory reset

Some problems require a factory reset if nothing else seems to work. In this way the DiGidot C4 device returns to its factory default. The factory reset will reset the input/output configuration, network settings and user accounts.
Recorded scenes, playlists and triggers will not be deleted. After resetting, the device can be accessed through IP Address 10.254.254.254.

WARNING! Deleted settings cannot be restored, please make a backup, before resetting the device.

1. Disconnect the power of the DiGidot C4.
2. While pressing the onboard button, re-apply power to the device and hold the button for 5 seconds. Both top- and side status light will blink 5 times yellow, then it remains on, which indicates that you can release the button. The device will reboot and is then ready to use.

Having trouble with your DiGidot C4 Setup?

When you have followed all the steps from the manual and still having problems settings up the DiGidot C4, you can visit our online support page digidot.eu/support or send us an e-mail: support@digidot.eu Please make a backup file and send it along with your email, as this will make trouble shooting for our engineers a lot easier.

If you can't connect to the DiGidot C4 User Interface try to open the user interface by opening Google Chrome and typing 10.254.254.254 in the address bar and press enter.
When the user interface does not load or seems unresponsive you can reload the page. When reloading doesn't resolve the problem you need to:

- Make sure the DiGidot C4 is connected correctly to a power source according to the wiring instructions.
- Make sure that the device is connected to a computer or mobile device.
- Empty your browser cache.
- Check for IP conflicts.
- Check your network connection and network settings. You can verify the connection of the network cable with the ethernet status lights of the RJ45 bus.

Make sure that the computer network is in the same range as the DiGidot C4. For example when your DiGidot C4 is configured to use the IP address “10.0.0.2” with
subnet mask “255.0.0.0” your computer network needs to be in that same “10.x.x.x” range on subnet mask “255.0.0.0”.

You can test your network connection with the DiGidot C4.
On Windows
Click the Start Menu **>** All Apps **>** Windows System **>** Command Prompt.

You can also find the Windows Command Prompt by right clicking on the Start button **>** Command Prompt.

On Mac OS
Open the Utilities Folder **>** Applications folder and open the Terminal App or you can use Spotlight by clicking CMD + Spacebar and search for Terminal App.

Type ping and the IP Address of the DiGidot C4 “ping 10.254.254.254“ and then press the Enter key of your keyboard to ping the DiGidot C4 device. A timeout will indicate a broken connection.

If you still can’t access your DiGidot C4, is the interface page not loading correctly or are the discovered devices not added automatically try to empty your browser cache and re-power and reload the user interface.

Forgot the username or password for the DiGidot C4?

When you have lost your username or password you can perform a factory reset of the DiGidot C4. The reset function will restore the factory settings. Information on the microSD card will not be erased. After resetting you can access the device on the default IP Address.
If you have made a backup, you can restore the device configurations according to the backup & restore instructions.

Can’t find your protocol/IC?

The DiGidot C4 supports the most SPI protocols of all Art-Net to SPI controllers on the market. However technology is evolving rapidly and we’re not always the first to know when there’s new product IC chip with a new protocol on the market.
In case you have or want to use an IC that is not listed in our supported IC’s overview, please contact support@digidot.eu. We will do our best to support your IC with a new firmware update soon after.

Need to cover greater cable distances between the outputs and first LED/IC?

If the cables between the outputs and LED/IC are longer than 2 metres (7 ft), we recommend to boost the signal in order to make sure that the system will work properly. Please use DiGidot range extending equipment such as Tx and Rx modules, which can be found on our website www.digidot.eu. This does not apply to DMX.

NOTE: SPI (Serial Peripheral Interface) protocols are originally designed for on board data communication between microcontrollers and other high speed processing components. Because SPI protocols are mostly communicating at extremely high speeds (in the MHz range) and were not designed to leave a PCB (Printed Circuit Board), long cable runs to transfer the data signal, are not accounted for. This means that a lot of malfunctions occur when cable lengths are too long.

Some LED's/colors are not responding correctly

This is a common issue that occurs when the voltage drops below a certain minimum.
Please check the voltage at the end of the LED strip and note that if you're running a 5 Vdc products for example, the data signal runs also on this level. If the voltage drops to 3.5 Vdc for example, this means that the IC's are not able to work properly and the data packets become corrupted. The LED's also require a certain minimum voltage (forward voltage), which varies per LED and color.

Reasons for voltage drops:

- Too long cable runs between power supply and LED product.
- Inappropriate wire gauge between power supply and LED product.
- Design of LED product that does not allow for high enough currents to pass (too small copper lanes and high resistance). Some LED strips for example cannot be daisy chained because of this. Contact your LED product manufacturer for technical specifications.

Based on the amount of current draw (amount of simultaneous LED's/colors being lit), the voltage may fluctuate and cause an intermittent fault. This means that in some cases everything might seem to work fine and sometimes when content or colors change, it might not.

Solutions:

1. Check the voltage with a voltage meter at the beginning of the line. If the voltage dropped at the beginning already, compared to the PSU voltage, please shorten the supply cables, increase wire gauges or increase the supply voltage if possible (some power supplies have a voltage adjust potentiometer that can be used to increase the output voltage a few percent).

NOTE: Do not exceed the supply voltage at the beginning of your data line/at your first LED product.

2. Re-supply voltage at some point (where the voltage drop measured is significant) before the faulty LEDs are visible (e.g. in the middle of the line) or at the end of the line.

NOTE: Re-supplying power must be done from the same power supply or if another power supply is being used, all grounds of of all power supplies must be connected in order to balance the ground potential.

TIP: Do not use excessive wire gauges to transfer data from the DiGidot C4 to the LED products, this will only increase the risk of failures. Typically we recommend to use wire gauges for the data signal of 0.3-0.5 mm^2 (20-22 AWG).

No microSD card

The DiGidot C4 Extended versions that require a microSD card. If the microSD card is not present or formatted properly, the status lights will blink alternating red.
Solution:

(Re-)Formatting the microSD card:

- From the User Interface go to “browser” and find your device in the left column. From the device row you can use the tool icon to open the microSD card information dialog.
- From the microSD card information dialog choose “Format SD Card” this will format the microSD card Note that all stored information will be lost!
- Confirm to continue the formatting process.

If a microSD card is inserted in a DiGidot C4 Live version, both status light will also blink alternating red.

Solution: Please remove the microSD card and restart the device.

C4 Extended crashes

When the DiGidot C4 Extended crashes or if unexpected microSD card errors occur, it is likely that there is a voltage problem. The DiGidot C4 microSD card drive requires a minimum voltage in order to operate properly and in some situations there can be sudden voltage drops that cause malfunctions. Double check that the supply voltage is always at a minimum of 5 Volts.

Unknown error

Disconnect and reconnect the DiGidot C4 from its power source to perform a reset. When none of the troubleshooting tips or the reset solves the problem you might need to open a technical support ticket. Please fill out a support ticket form on our website.

Interface issues

We are constantly working on new features, improvements and but fixes but we try to limit the amount of official updates and spend some time testing the product and different scenarios. However sometimes we have fixed a problem but do not release an official update yet.
If you encounter any issues we offer a semi-stable beta interface. In order to use the beta version you can use your browser (preferably Google Chrome) and go to beta.digidot.eu. Please note that you need an internet connection to use the beta interface.
In any case if you encounter an issue we kindly ask to report it to us by email to support@digidot.eu.

FAQ

How many universes can be recorded?

The DiGidot C4 Extended will only record the universes that are configured in the device.
The limitation of recorded universes is therefore defined by the license. All recorded universes can simultaneously be redirected to the Art-Net output.
If the amount of universes that you want to record exceeds the amount of universes corresponding to your license, you have to use multiple C4 Extended controllers with the right amount of universes and configure them to the appropriate universes. Once you start recording, all C4 Extended controllers will start recording their designated universes.
There is no limitation in terms of universe numbers, you can record any universe that's being transmitted within the same Art-Net network.

Can licenses be combined in a network?

Yes it's possible to combine various licenses such as Live and Extended within one network.
One application example could be that the DiGidot C4 Extended version is used to record an Art-Net stream which is triggered by the analogue inputs. The control signal will then be send by Art-Net to all other devices which can output the amount of universes, corresponding to the specific licenses.
Please note that in order to maintain sync, we recommend to use high speed routers/ethernet switches.

How does the DiGidot C4 know what time it is?

As soon as you load the DiGidot C4 interface, the browser time of your computer or mobile device is copied. The internal battery will keep track of time, until you load the interface again to synchronize time. Please note that the browser time is not necessarily accurate, because it can be set manually or correspond to different time zones. If you are going to use time based triggers and events, please make sure to verify your browser time.

Why do I get a repeating message; "The SD card(s) need to be formatted"?

When you keep on getting this message during start up and when loading the interface, this often indicates that the operating voltage of the DiGidot C4 is a little too low. The chance for this error message increases when powering the DiGidot S4 from the end of the LED product(s) and when more LEDs are turned on. Please check the voltage at the screw terminal of the DiGidot C4 and re-apply power or change your wiring if necessary.

TIP: There are some 'hidden' menus available in the interface and DiGidot app, which can be accessed when pressing a button or slider for about one second.
E.G.: On the 'Scenes' page, when playing a scene, you can maximize the player bar (page bottom right). This will show three sliders for Speed, Hue and Brightness. When pressing the slider bars, an extra screen with additional options will appear.

Accessories

DiGidot offers various accessories for your installation.
Please contact your DiGidot reseller to order other following DiGidot products.

Transmitter and receiver modules

DiGidot PxLNet Transmitter

Art. no.: 20342

- Operating voltage: 5-48Vdc
- Converts up to four unbalanced SPI signals to PxLNet to transmit over large distance up to 250 meters (requires DiGidot receiver modules)
- Converts four DMX TTL signals to four balanced DMX outputs
- Supplies power to DiGidot C4
- Inter connects all grounds

DiGidot Rx48 Receiver

Art. no.: 20326

- Operating voltage: 12-48 Vdc
- Converts PxLNet to the original SPI protocol
- Can directly be soldered to the beginning of most SPI controlled LED strips
- RJ45 bus and solder pads for signal input

DiGidot PxLNet Transceiver

Art. no.: 20326

- Operating voltage: 5-24 Vdc
- Two operating modes:
- Receiving mode: Converts PxLNet to the original SPI protocol
- Transmitting mode: Converts SPI protocol to PxLNet
- Can directly be soldered to the beginning or end of most SPI controlled LED strips
- RJ45 bus and solder pads for signal input

Accessories

DiGidot TRRS Trigger Cable

Art. no.: 20903

- Optional cable to connect 3 analogue trigger inputs to DiGidot C4 Extended
- 1 meter in length

DiGidot RJ45 Network Cable

Art. no.: 20330

- RJ45 Network cable for connecting and daisy chaining DiGidot C4 (included with DiGidot C4 Extended)

DiGidot USB Power Cable

Art. no.: 20331

- Power cable to connect DiGidot C4 to 5 Vdc USB port (included with DiGidot C4 Extended)

DiGidot DIN-Rail Clip

Art. no.: 20902

- Optional DIN-rail Mounting Clip for DiGidot C4

DiGidot 8GB microSD Card

Art. no.: 20901

- Industrial grade spare microSD memory card for DiGidot C4 Extended (included with DiGidot C4 Extended)

For further DiGidot products, Transceiver kits and accessories visit our website www.digidot.eu.

Online resources

For technical specifications, latest documentation, manuals, product information, support and upgrades, please visit www.digidot.eu.

Remarks

We've put great care in writing this manual. However in case you encounter any discrepancies or unclarities, please contact us. This manual and feature specific instructions are based on firmware and interface versions mentioned in the chapter 'Manual version'.

NOTE: This manual covers information for the DiGidot C4 Live and Extended controllers. In case of C4 Live controllers, some of the features may not be displayed in the user interface because they are limited to the Extended version only (refer to appropriate symbols in this manual).

Terminology

SPI	Serial Peripheral Interface; This is an interface bus between that is used to send data between microcontrollers and IC's.
IC	Integrated Circuit; this is an electronic component which houses a ready made circuit that is able to perform one specific task. An IC can be placed separately on a PCB or integrated in a LED package to control/drive a LED or segment/array of LEDs.
IC/SPI protocol	Type of control protocol that is used by an IC.
Scene	A scene can also be referred to as a cue and can contact static and dynamic values that control specific channels.
Playlist	A playlist consists of multiple scenes that are played in a specific order according to pre programmed parameters.
Action list	A sequence of actions triggered by only one trigger.
Universe	Typically a universe is referred to as one DMX control network consisting of 512 control channels, also typically associated with one DMX output. DiGidot also refers to a universe as one set of 512 control Channels that belong to specific Art-Net or DMX universes. But when we mention more than one universes on one output for example, we always refer to them as amount of control channels and not necessarily as DMX universes.

I/O configuration Input/Output configuration, determines how and which signals the C4 is controlled by and how the ports of the C4 are configured.

Compliances & EU declaration of Conformity

This product is designed and produced by DiGidot BV, Amsterdam, The Netherlands.

Hereby, DiGidot Technologies BV declares that the DiGidot C4 device complies with and was tested according to essential requirements of all relevant CE directives.
Certificate of CE conformity: No. 2016/119-1

cETL US Listed - Intertek 5010008 I.T.E.
Conforms to ANSI/ UL 62368-1
Cert. to CAN/CSA C22.2#62368-1

DiGidot Technologies BV is a registered DMX-RDM manufacturer at tsp.esta.org, under ID 00B6h.

DiGidot Technologies BV registered Art-Net manufacturer at artisticlicence.com, under ID 0x0fd0.

Warranty

This product is covered by a carry-in manufacturer's warranty of 2 years which covers any design faults, production faults and component failures.
Warranty voids if the product was installed or used incorrectly or not in accordance with this manual, and/or if the product was damaged due to external factors, opened, modified or electrically overloaded. Warranty conditions of DiGidot Technologies B.V. apply. Warranty claims have to be issued by email: support@digidot.eu.

Disposal and recycling

This product should not be disposed with other household waste. When you decide to dispose this product and/or its battery, do so in accordance with local environmental and recycling regulations.

Feedback

Tell us all about your experience with DiGidot!
The continuous development of the DiGidot control platform is only possible thanks to feedback from our users. If you have any suggestions, please contact us by email: info@digidot.eu.

Imprint

DiGidot Technologies BV
Valschermkade 27-28
1059 CD Amsterdam
The Netherlands

Chamber of commerce registration: 67637825
VAT identification no.: NL857103581B01
Managing director: Stefan Verhoef

Phone: +31 (0)20 820 1849
info@digidot.eu
www.digidot.eu

Trademarks

Used trademarks and product names belong to their respective owners and and are only being used for illustrational purposes.

Art-Net™ is designed and copyright by Artistic Licence Holdings Ltd
MADRIX is a registered trademark of inoage GmbH
Resolume Arena is a registered trademark of Resolume B.V.
MadMapper is a registered trademark of GarageCube SA & 1024 Architecture
Pharos is a registered trademark of Pharos Architectural Controls Limited
grandMA is a registered trademark of MA Lighting International GmbH
POET is a registered trademark of Skandal Technologies

Copyright

© 2019 DiGidot Technologies BV. All rights reserved.
Errors and omissions excepted. The information in this document is subject to change at any time without prior notice. Visit our website www.digidot.eu for the most recent version of this document. It’s not allowed to copy or reproduce, translate or publish the information within this document without prior written approval from DiGidot Technologies BV.

Disclaimer

DiGidot Technologies B.V. explicitly rejects any form of liability claims in advance, whether it concerns direct or indirect disadvantages, damage, injuries, loss of income or other financial, materialistic or personal consequences that are directly or indirectly caused by use of this product or it’s owner or user. Any form of unintended or misuse of this information and/or DiGidot products indemnifies DiGidot Technologies BV from liability and warranty obligations.

Manual version

This manual version may pre date the firmware version of your DiGidot C4 controller. Some functions may be different and new features may have been added. Please make sure that you’re using the manual that matches your firmware version.

This manual corresponds to DiGidot C4 firmware version listed below this page.