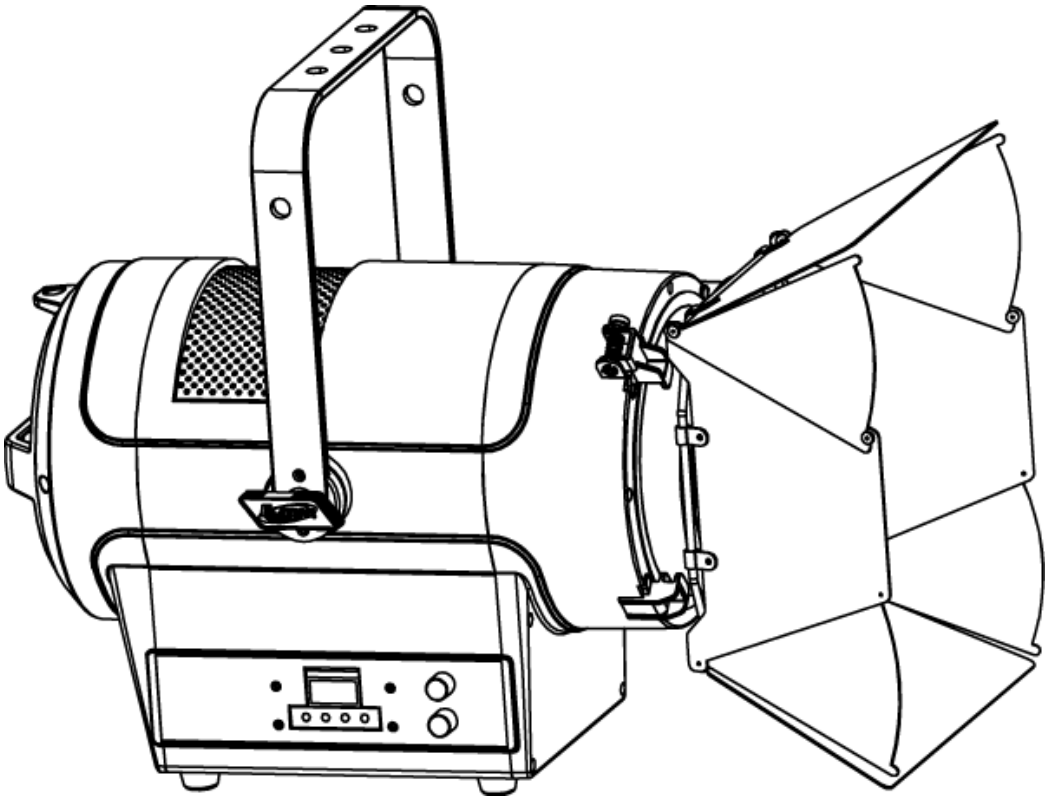

KL FRESNEL 8™

user manual

©2019 ELATION PROFESSIONAL all rights reserved. Information, specifications, diagrams, images, and instructions herein are subject to change without notice. ELATION PROFESSIONAL logo and identifying product names and numbers herein are trademarks of ELATION PROFESSIONAL. Copyright protection claimed includes all forms and matters of copyrightable materials and information now allowed by statutory or judicial law or hereinafter granted. Product names used in this document may be trademarks or registered trademarks of their respective companies and are hereby acknowledged. All non-ELATION brands and product names are trademarks or registered trademarks of their respective companies.

ELATION PROFESSIONAL and all affiliated companies hereby disclaim any and all liabilities for property, equipment, building, and electrical damages, injuries to any persons, and direct or indirect economic loss associated with the use or reliance of any information contained within this document, and/or as a result of the improper, unsafe, insufficient and negligent assembly, installation, rigging, and operation of this product.

Elation Professional USA | 6122 S. Eastern Ave. | Los Angeles, CA. 90040
323-582-3322 | 323-832-9142 fax | www.elationlighting.com | info@elationlighting.com

Elation Professional B.V. | Junostraat 2 | 6468 EW Kerkrade, The Netherlands
+31 45 546 85 66 | +31 45 546 85 96 fax | www.elationlighting.eu | info@elationlighting.eu

Elation Professional Mexico | AV Santa Ana 30 | Parque Industrial Lerma, Lerma, Mexico 52000
+52 (728) 282-7070

D O C U M E N T V E R S I O N

Due to additional product features and/or enhancements, an updated version of this document may be available online. Please scan the QR Code with your mobile device or visit www.elationlighting.com for the latest revision/update of this manual, before installation and/or programming.

Date	Document Version	Software Version ≥	DMX Channel Modes	Notes
1/5/18	1	1.02	2 / 3 / 4 / 6	Initial release.
01/31/18	1.2	N/C	NO CHANGE	Added Manual Dimming Control instructions.
05/13/18	1.4	N/C	NO CHANGE	Updated manual format.
10/12/18	1.6	1.07	2 / 3 / 2-3 / 4 / 2-4 / 6	Added 2-3CH + 2-4 DMX Modes, Gamma 1.0 brightness, and Stage2 Dimming Curve Mode.
03/02/19	1.8	1.08	1 / 2 / 3 / 4 / 5	Updated DMX channels and System Menu.
08/20/20	2.0	1.10	NO CHANGE	Updated primary
10/06/20	2.2	N/C	NO CHANGE	Updated specifications, refresh frequency

C O N T E N T S

General Information	4
Limited Warranty (USA Only)	5
Safety Guidelines	6
Maintenance Guidelines	8
Fixture Overview	9
Installation Guidelines	10
System Menu	14
Manual Dimming and Zoom Control	18
DMX Channel Functions And Values	19
Specifications	23
Optional Accessories	25

GENERAL INFORMATION

INTRODUCTION

Please read and understand the instructions in this manual carefully and thoroughly before attempting to operate this device. These instructions contain important safety and use information.

UNPACKING

Every device has been thoroughly tested and has been shipped in perfect operating condition. Carefully check the shipping carton for damage that may have occurred during shipping. If the carton is damaged, carefully inspect the device for damage, and be sure all accessories necessary to install and operate the device have arrived intact. In the event damage has been found or parts are missing, please contact our customer support team for further instructions. Please do not return this device to your dealer without first contacting customer support. Please do not discard the shipping carton in the trash. Please recycle whenever possible.

BOX CONTENTS

Barn Door
Gel Frame
Power Cable
Barn Door Safety Cable (USA Only)

CUSTOMER SUPPORT

Contact ELATION Service for any product related service and support needs.
Also visit forums.elationlighting.com with questions, comments or suggestions.

ELATION SERVICE USA - Monday - Friday 8:00am to 4:30pm PST
323-582-3322 | Fax 323-832-9142 | support@elationlighting.com

ELATION SERVICE EUROPE - Monday - Friday 08:30 to 17:00 CET
+31 45 546 85 63 | Fax +31 45 546 85 96 | support@elationlighting.eu

REPLACEMENT PARTS please visit parts.elationlighting.com

⚠ IMPORTANT NOTICE!

THERE ARE NO USER SERVICEABLE PARTS INSIDE THIS UNIT.
DO NOT ATTEMPT ANY REPAIRS YOURSELF; DOING SO WILL VOID YOUR MANUFACTURES WARRANTY. DAMAGES RESULTING FROM MODIFICATIONS TO THIS FIXTURE AND/OR THE DISREGARD OF SAFETY INSTRUCTIONS AND GUIDELINES IN THIS MANUAL VOID THE MANUFACTURES WARRANTY AND ARE NOT SUBJECT TO ANY WARRANTY CLAIMS AND/OR REPAIRS.

LIMITED WARRANTY (USA ONLY)

A. Elation Professional hereby warrants, to the original purchaser, Elation Professional products to be free of manufacturing defects in material and workmanship for a period of two years (730 days), and Elation Professional product rechargeable batteries to be free of manufacturing defects in material and workmanship for a period of six months (180 days), from the original date of purchase. This warranty excludes discharge lamps and all product accessories. This warranty shall be valid only if the product is purchased within the United States of America, including possessions and territories. It is the owner's responsibility to establish the date and place of purchase by acceptable evidence, at the time service is sought. B. For warranty service, send the product only to the Elation Professional factory. All shipping charges must be pre-paid. If the requested repairs or service (including parts replacement) are within the terms of this warranty, Elation Professional will pay return shipping charges only to a designated point within the United States. If any product is sent, it must be shipped in its original package and packaging material. No accessories should be shipped with the product. If any accessories are shipped with the product, Elation Professional shall have no liability what so ever for loss and/or or damage to any such accessories, nor for the safe return thereof. C. This warranty is void if the product serial number and/or labels are altered or removed; if the product is modified in any manner which Elation Professional concludes, after inspection, affects the reliability of the product; if the product has been repaired or serviced by anyone other than the Elation Professional factory unless prior written authorization was issued to purchaser by Elation Professional; if the product is damaged because not properly maintained as set forth in the product instructions, guidelines and/or user manual. D. This is not a service contract, and this warranty does not include any maintenance, cleaning or periodic check-up. During the periods as specified above, Elation Professional will replace defective parts at its expense, and will absorb all expenses for warranty service and repair labor by reason of defects in material or workmanship. The sole responsibility of Elation Professional under this warranty shall be limited to the repair of the product, or replacement thereof, including parts, at the sole discretion of Elation Professional. All products covered by this warranty were manufactured after January 1, 1990, and bare identifying marks to that effect. E. Elation Professional reserves the right to make changes in design and/or performance improvements upon its products without any obligation to include these changes in any products theretofore manufactured. F. No warranty, whether expressed or implied, is given or made with respect to any accessory supplied with the products described above. Except to the extent prohibited by applicable law, all implied warranties made by Elation Professional in connection with this product, including warranties of merchantability or fitness, are limited in duration to the warranty periods set forth above. And no warranties, whether expressed or implied, including warranties of merchantability or fitness, shall apply to this product after said periods have expired. The consumer's and/or dealer's sole remedy shall be such repair or replacement as is expressly provided above; and under no circumstances shall Elation Professional be liable for any loss and/or damage, direct and/or consequential, arising out of the use of, and/or the inability to use, this product. G. This warranty is the only written warranty applicable to Elation Professional products and supersedes all prior warranties and written descriptions of warranty terms and conditions heretofore published.

WARRANTY RETURNS

All returned service items whether under warranty or not, must be freight pre-paid and accompany a return authorization (R.A.) number. The R.A. number must be clearly written on the outside of the return package. A brief description of the problem as well as the R.A. number must also be written down on a piece of paper and included in the shipping container. If the unit is under warranty, you must provide a copy of your proof of purchase invoice. Items returned without a R.A. number clearly marked on the outside of the package will be refused and returned at customer's expense. You may obtain a R.A. number by contacting customer support.

SAFETY GUIDELINES

This fixture is a sophisticated piece of electronic equipment. To guarantee a smooth operation, it is important to follow all instructions and guidelines in this manual. Elation Professional is not responsible for injury and/or damages resulting from the misuse of this fixture due to the disregard of the information printed in this manual. Only qualified and/or certified personnel should perform installation of this fixture and only the original rigging parts (omega brackets) included with this fixture should be used for installation. Any modifications to the fixture and/or the included mounting hardware will void the original manufactures warranty and increase the risk of damage and/or personal injury.

PROTECTION CLASS 1 - FIXTURE MUST BE PROPERLY GROUNDED

THERE ARE NO USER SERVICEABLE PARTS INSIDE THIS UNIT. DO NOT ATTEMPT ANY REPAIRS YOURSELF; DOING SO WILL VOID YOUR MANUFACTURES WARRANTY. DAMAGES RESULTING FROM MODIFICATIONS TO THIS FIXTURE AND/OR THE DISREGARD OF SAFETY INSTRUCTIONS AND GUIDELINES IN THIS MANUAL VOID THE MANUFACTURES WARRANTY AND ARE NOT SUBJECT TO ANY WARRANTY CLAIMS AND/OR REPAIRS.

DO NOT PLUG FIXTURE INTO A DIMMER PACK!
NEVER OPEN THIS FIXTURE WHILE IN USE!
UNPLUG POWER BEFORE SERVICING FIXTURE!
NEVER TOUCH FIXTURE DURING OPERATION, AS IT MAY BE HOT!
KEEP FLAMMABLE MATERIALS AWAY FROM FIXTURE!

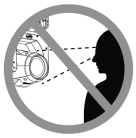

NEVER LOOK DIRECTLY INTO THE LIGHT SOURCE!
RETINA INJURY RISK - MAY INDUCE BLINDNESS!
SENSITIVE PERSONS MAY SUFFER AN EPILEPTIC SHOCK!

INDOOR / DRY LOCATIONS USE ONLY!
DO NOT EXPOSE FIXTURE TO RAIN AND MOISTURE!

SAFETY GUIDELINES

DO NOT TOUCH the fixture housing during operation. Turn OFF the power and allow approximately 15 minutes for the fixture to cool down before serving.

DO NOT shake fixture, avoid brute force when installing and/or operating fixture.

DO NOT operate fixture if the power cord is frayed, crimped, damaged and/or if any of the power cord connectors are damaged and do not insert into the fixture securely with ease.

NEVER force a power cord connector into the fixture. If the power cord or any of its connectors are damaged, replace it immediately with a new one of similar power rating.

DO NOT block any air ventilation slots.

All fan and air inlets must remain clean and never blocked.

Allow approx. 6” (15cm) between fixture and other devices or a wall for proper cooling.

When installing fixture in a suspended environment, always use mounting hardware that is no less than M10 x 25 mm, and always install fixture with an appropriately rated safety cable.

Always disconnect fixture from main power source before performing any type of service and/or cleaning procedure. Only handle the power cord by the plug end, never pull out the plug by tugging the wire portion of the cord.

During the initial operation of this fixture, a light smoke or smell may emit from the interior of the fixture. This is a normal process and is caused by excess paint in the interior of the casing burning off from the heat associated with the lamp and will decrease gradually over time. Consistent operational breaks will ensure fixture will function properly for many years.

ONLY use the original packaging and materials to transport the fixture in for service.

MAINTENANCE GUIDELINES

DISCONNECT POWER BEFORE PERFORMING ANY MAINTENANCE!

CLEANING

Frequent cleaning is recommended to insure proper function, optimized light output, and an extended life. The frequency of cleaning depends on the environment in which the fixture operates: damp, smoky or particularly dirty environments can cause greater accumulation of dirt on the fixture's optics. Clean the external lens surface at least every 20 days with a soft cloth to avoid dirt/debris accumulation.

NEVER use alcohol, solvents, or ammonia-based cleaners.

MAINTENANCE

Regular inspections are recommended to insure proper function and extended life.

There are no user serviceable parts inside this fixture, please refer all other service issues to an authorized Elation service technician. Should you need any spare parts, please order genuine parts from your local Elation dealer.

Please refer to the following points during routine inspections:

A detailed electric check by an approved electrical engineer every three months, to make sure the circuit contacts are in good condition and prevent overheating.

Be sure all screws and fasteners are securely tightened at all times. Lose screws may fall out during normal operation resulting in damage or injury as larger parts could fall.

Check for any deformations on the housing, color lenses, rigging hardware and rigging points (ceiling, suspension, trussing). Deformations in the housing could allow for dust to enter into the fixture. Damaged rigging points or unsecured rigging could cause the fixture to fall and seriously injure a person(s).

Electric power supply cables must not show any damage, material fatigue or sediments.

NEVER remove the ground prong from the power cable.

FIXTURE OVERVIEW

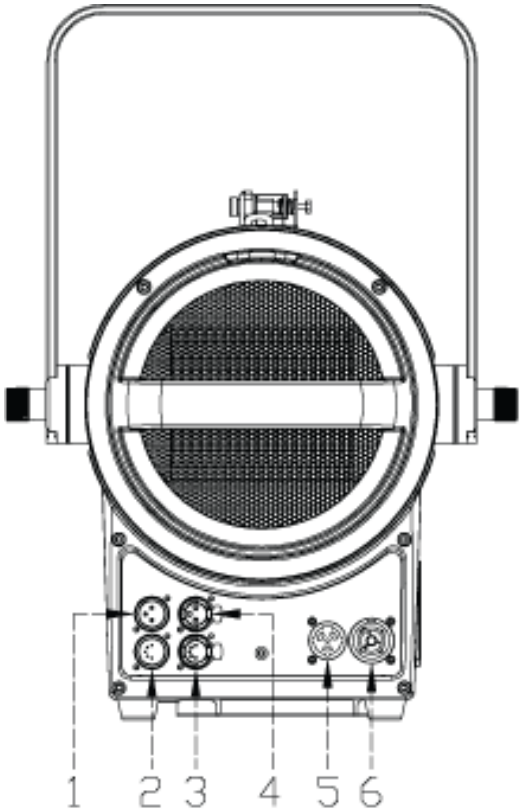

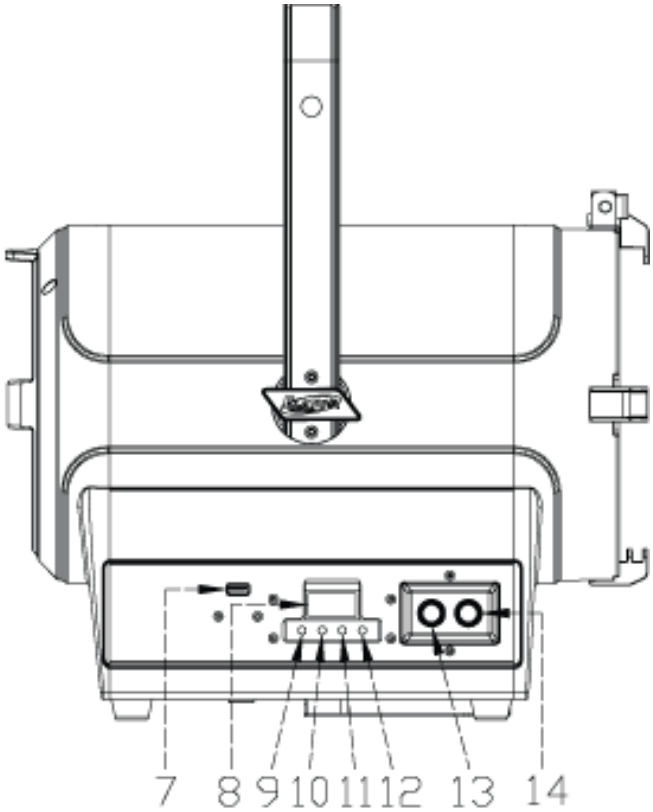

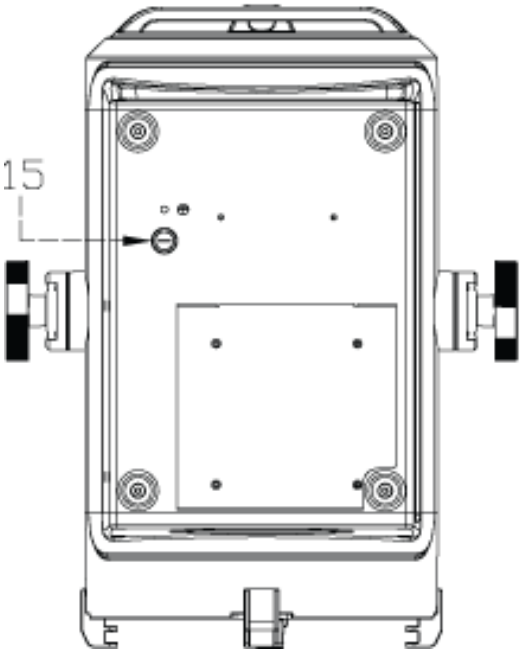

1.3pin DMX In

2.5pin DMX In

3.5pin DMX Out

4.3pin DMX Out

5.Power In

6.Power Out

7.USB Software Update Port

8.OLED Control Menu Display

9.MODE Button

10.UP Button

11.DOWN Button

12.ENTER Button

13.Manual Dimming Control

14.Manual Zoom Control

15.Fuse

INSTALLATION INSTRUCTIONS

FLAMMABLE MATERIAL WARNING

Keep fixture minimum 5.0 feet (1.5m) away from flammable materials and/or pyrotechnics.

ELECTRICAL CONNECTIONS

A qualified electrician should be used for all electrical connections and/or installations.

USE CAUTION WHEN POWER LINKING OTHER MODEL FIXTURES AS THE POWER CONSUMPTION OF OTHER MODEL FIXTURES MAY EXCEED THE MAX POWER OUTPUT ON THIS FIXTURE. CHECK SILK SCREEN FOR MAX AMPS.

DO NOT INSTALL THE FIXTURE IF YOU ARE NOT QUALIFIED TO DO SO!

Fixture **MUST** be installed following all local, national, and country commercial electrical and construction codes and regulations.

Before rigging/mounting a single fixture or multiple interconnected fixtures for custom matrix designs to any metal truss/structure or placing the fixture(s) on any surface, a professional equipment installer **MUST** be consulted to determine if the metal truss/structure or surface is properly certified to safely hold the combined weight of the fixture(s), clamps, cables, and accessories.

Fixture ambient operating temperature range is **14° to 113°F. (-10° to 45°C)**
Do not use the fixture under or above this temperature.

Fixture(s) should be installed in areas outside walking paths, seating areas, or away from areas were unauthorized personnel might reach the fixture by hand.

NEVER stand directly below the fixture(s) when rigging, removing or servicing.
Overhead fixture installation must always be secured with a secondary safety attachment, such as an appropriately rated safety cable that meets all local, national, and country codes and regulations. Allow approximately 15 minutes for the fixture to cool down before serving.

GEL FRAME AND BARN DOOR INSTALLATION

The fixture has 2 slots on the front to hold the **GEL FRAME** and **BARN DOOR**. The first smaller slot is for the **GEL FRAME** and the second larger slot is for the **BARN DOOR**. The fixture also has a top lock that secures these accessories to the fixture.

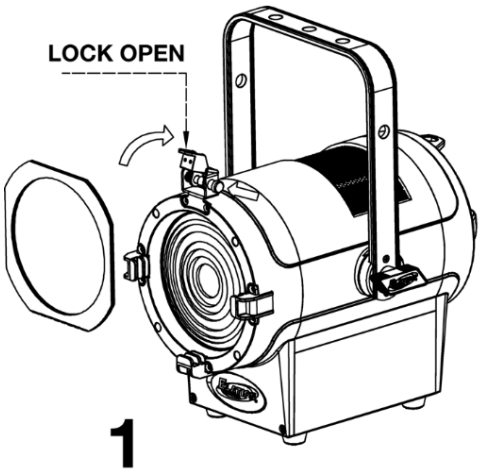

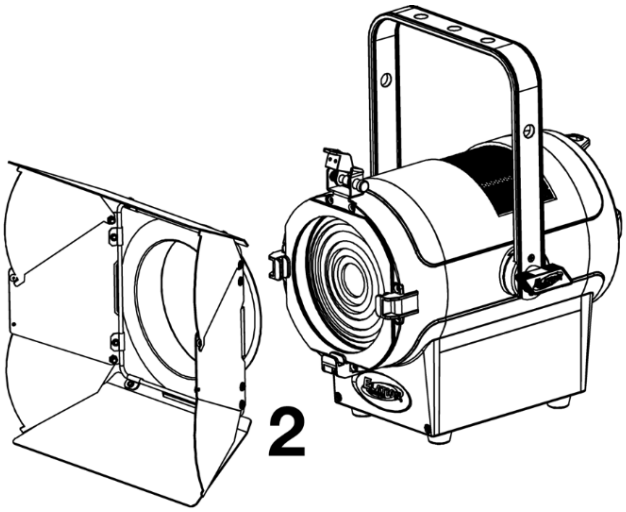

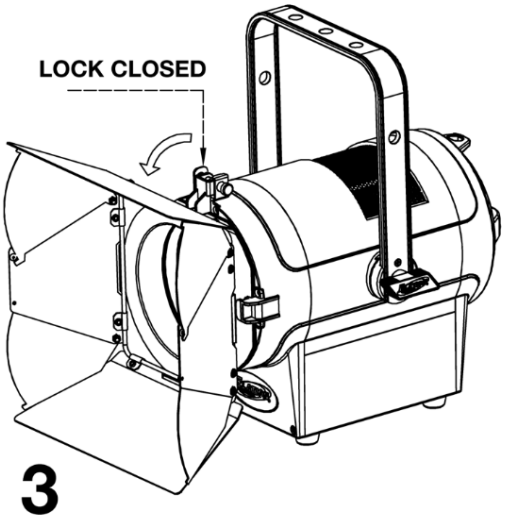

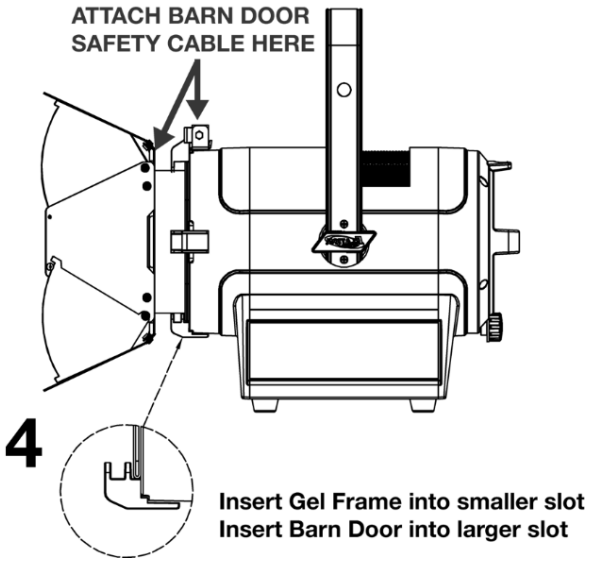

Secure the included mini SAFETY CABLE to the BARN DOOR and the top lock.

1. Lift up lock on top of fixture and insert **GEL FRAME** into the first slot closest to fixture.

2. Insert **BARN DOOR** into the second slot.

3. Lower the lock on top of the fixture to secure both the **GEL FRAME** and **BARN DOOR**.

4. Secure the included mini **SAFETY CABLE** to the **BARN DOOR** and top lock.

CLAMP INSTALLATION

This fixture includes an adjustable dual mounting yoke and safety cable rigging point attached to the fixture (see the illustration below). When mounting this fixture to truss, be sure to secure an appropriately rated clamp (not included) to the yoke using an M10 screw and attach a **SAFETY CABLE** to the safety cable rigging point**.**

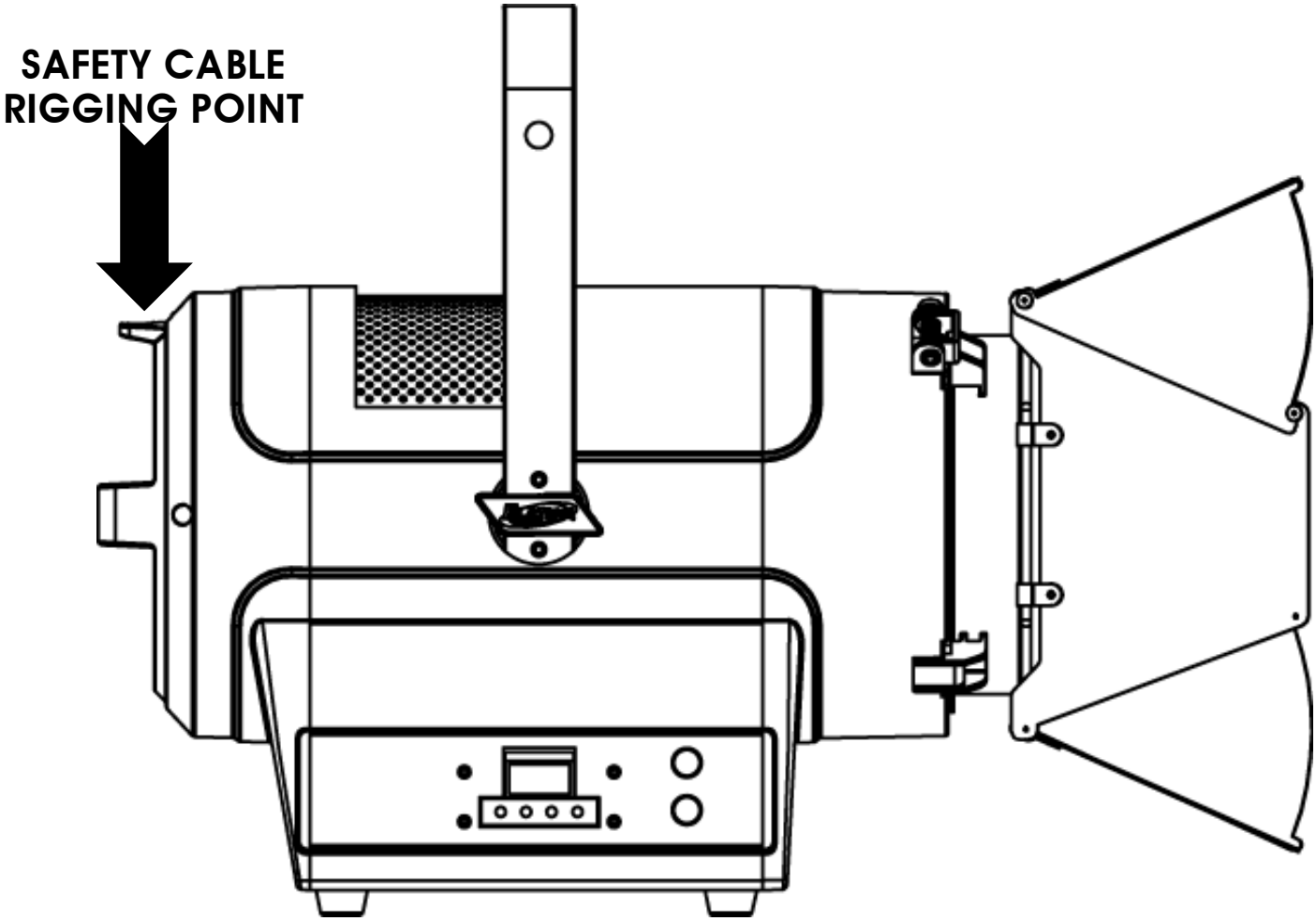

RIGGING

Overhead rigging requires extensive experience, including amongst others calculating working load limits, installation material being used, and periodic safety inspection of all installation material and the fixture. If you lack these qualifications, do not attempt the installation yourself. Improper installation can result in bodily injury. Fixture is fully operational in the specific mounting positions illustrated below.

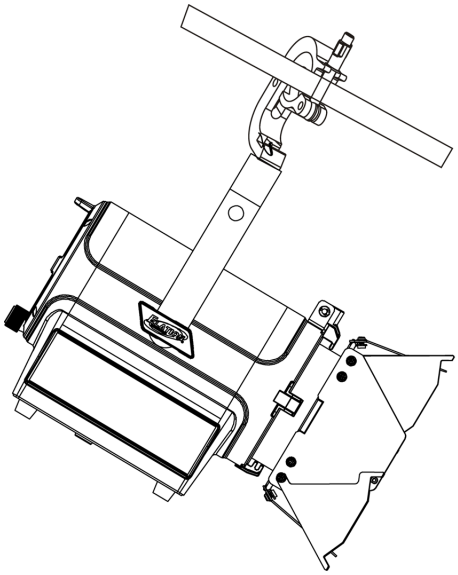

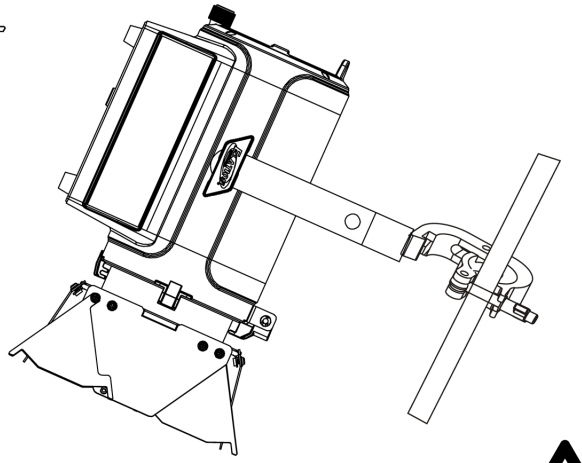

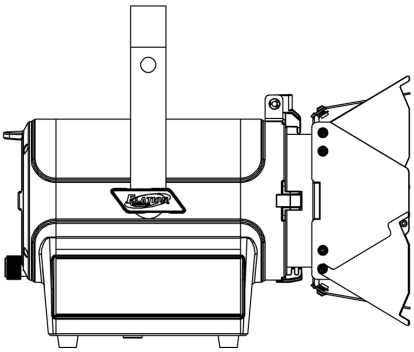

S A F E T Y C A B L E

ALWAYS ATTACH A SAFETY CABLE WHENEVER INSTALLING THIS FIXTURE IN A SUSPENDED ENVIRONMENT TO ENSURE THE FIXTURE WILL NOT DROP IF THE CLAMP FAILS.

SYSTEM MENU

The fixture includes an easy to navigate system menu. The control panel (see image below) located on the side of the fixture provides access to the main system menu and is where all necessary system adjustments are made to the fixture. During normal operation, pressing **MODE** button once will access the fixture's main menu. Once in the main menu you can navigate through the different functions and access the sub-menus with the **UP** and **DOWN** buttons. Once you reach a field that requires adjusting, press the **ENTER** button to activate that field and use the **UP** and **DOWN** buttons to adjust the field. Pressing the **ENTER** button once more will confirm your setting. You may exit the main menu at any time without making any adjustments by pressing the **MODE** button.

NOTE: To access the LCD Menu Control Display when locked, press and hold the **MODE** button for 3 seconds. The LCD Menu Control Display will shut **OFF** automatically about 1 minute from the last button press.

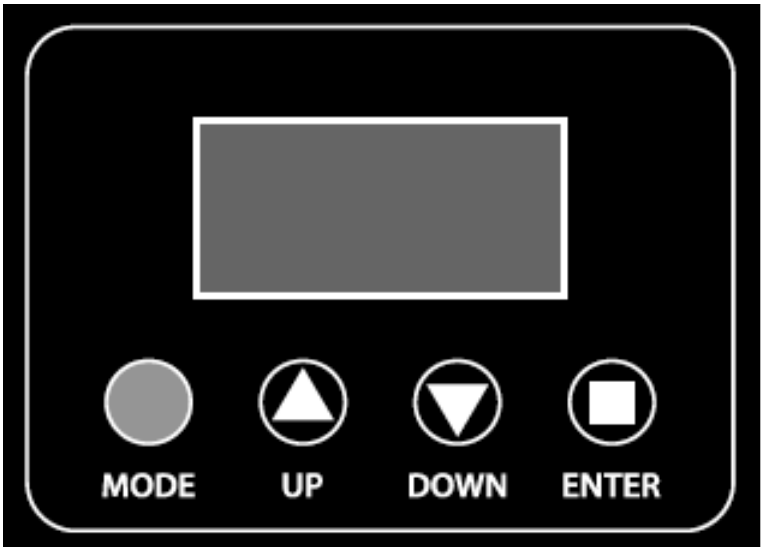

SYSTEM MENU - Supports Software Versions: ≥ 1.02				
Features subject to change without notice.				
MAIN MENU	**SUB MENU**	**OPTIONS / VALUES** (Default Settings in **BOLD**)		**DESCRIPTION**
Address	Address	**001** ~ XXX		Set DMX Address Setting
UserMode	User Mode	2CH, **3CH**,4CH, 6CH		Set DMX Channel / User Mode
Function	Status	Lost Dmx	**Hold** / Black	Function If NO DMX Detected
	LCD. Set	Display	**ON** / OFF	OLED Display Screen Saver Mode *When ON goes off after 30 seconds. **ONLY WHEN DMX IS CONNECTED.**
		Key Lock	**ON** / OFF	Control Front Panel Buttons Key Lock
		Flash	**ON** / OFF	Display flashes when NO DMX
		Invert	**OFF** / ON	Flip LCD Display 180°
	Temp. C/F	**F** / C		Temperature Switch Between C°/ F°
	Dim Curve	**Standard**, Stage, TV, Architec, Theatre		Set Dimmer Curve Mode
	Disp. Set	**ADDR**, Disp.CH, Salve		Set Information to Display on LCD
	Fan. Set	Led Fan	**Auto**, High, LoW	Set LED Fan Speed
	Gamma	**2.0**, 2.2, 2.4, 2.8		Set Gamma Brightness
	Frequen	**900kHz**, 1000kHz, 1100kHz, 1200kHz, 1300kHz, 1400kHz, 1500kHz, 2500kHz, 4000kHz, 5000kHz, 10kHz, 15kHz, 20kHz, 25kHz		Set LED Refresh Frequency
	USB_Data	**OFF**, ON		Software Update Port - Contact Service
	DFSE	**OFF**, ON		Restore Factory Settings
Info	TimeInfo	Current	000 (Hours)	Fixture Run Time From Power ON
		Total	000 (Hours)	Fixture Total Run Time
		Last	000 (Hours)	Clear Fixture Last Run Time
		Password	PIN= **050**	Enter PIN to Access Clear Last. Menu
		Clear	ON / **OFF**	Reset Fixture Last Run Time
	TempInfo	Led Temp	000 **F** (C)	Temperature of LED
	Err. Info	Error Record 1 ~ Error Record 10		Display 10 Recent Error Messages
	ModelInf	KLF8		Display Model Name
	Software	Software	V1.02	Software Version (Greater than or Equal to)
Test	Reset.M	Zoom		Reset Zoom Motor
	ManCtrl	Dimmer, Zoom, Strobe		Manual Control Functions
	Calibrat	PassWord	Password=**050**	Calibrate Zoom Motor **(PSWD Required to Access)**
		Zoom	000-255	

SYSTEM MENU UPDATE WITH SOFTWARE UPDATE VERSION ≥1.0.7

See highlighted menu items below which have been updated with this software update.

SYSTEM MENU - Supports Software Versions: ≥ 1.07			
Features subject to change without notice.			
MAIN MENU	**SUB MENU**	**OPTIONS / VALUES** (Default Settings in **BOLD**)	**DESCRIPTION**
UserMode	User Mode	2CH, **3CH**, **2-3CH**, 4CH, **2-4CH**, 6CH	Set DMX Channel / User Mode
Function	Dim Curve	**Standard**, Stage, TV, Architec, Theatre. **Stage2**	Set Dimmer Curve Mode
	Gamma	**1.0**, **2.0**, 2.2, 2.4, 2.8	Set Gamma Brightness

SYSTEM MENU - Supports Software Versions: ≥ 1.08				
Features subject to change without notice.				
MAIN MENU	**SUB MENU**	**OPTIONS / VALUES** (Default Settings in **BOLD**)		**DESCRIPTION**
Address	Address	**001** ~ XXX		Set DMX Address Setting
UserMode	User Mode	Dimmer / **Dimmer 16bit** / 3CH / Standard / Extended		Set DMX Channel / User Mode
Function	Status	Lost Dmx	**Hold** / Black	Function If NO DMX Detected
	LCD. Set	Display	**ON** / OFF	OLED Display Screen Saver Mode *When ON goes off after 30 seconds. **ONLY WHEN DMX IS CONNECTED.**
		Key Lock	**ON** / OFF	Control Front Panel Buttons Key Lock
		Flash	**ON** / OFF	Display flashes when NO DMX
		Invert	ON / **OFF**	Flip LCD Display 180°
	Temp. C/F	C / **F**		Temperature Switch Between C°/ F°
	Dim Mode	**Standard**, Stage, TV, Architec, Theatre. Stage2, 0.0s, 0.1s, 0.2s, 0.3s, 0.4s, 0.5s, 0.6s, 0.7s, 0.8s, 0.9s, 1.0s, 1.5s, 2.0s, 3.0s, 4.0s, 5.0s, 6.0s, 7.0s, 8.0s, 9.0s, 10.0s		Set Dimmer Mode
	Disp. Set	**ADDR**, Disp.CH, Salve		Set Information to Display on LCD
	Fan. Set	Led Fan	**Auto** / High / Low	Set LED Fan Speed
	Dim Curve	**Linear** / Square / INV-Square / S-Curve		Set Dimmer Curve Mode
	Frequen	900kHz, 1000kHz, 1100kHz, **1200kHz**, 1300kHz, 1400kHz, 1500kHz, 2500kHz, 4000kHz, 5000kHz, 10kHz, 15kHz, 20kHz, 25kHz		Set LED Refresh Frequency
	USB_Data	ON, **OFF**		Software Update Port - Contact Service
	Primary	ON, **OFF**		Primary Mode
	DFSE	ON, **OFF**		Restore Factory Settings
Info	TimeInfo	Current	000 (Hours)	Fixture Run Time From Power ON
		Total	000 (Hours)	Fixture Total Run Time
		Last	000 (Hours)	Clear Fixture Last Run Time
		Password	PIN= **050**	Enter PIN to Access Clear Last. Menu
		Clear	ON / **OFF**	Reset Fixture Last Run Time
	TempInfo	Led Temp	000 C / **F**	Temperature of LED
	Err. Info	Error Record 1 ~ Error Record 10		Display 10 Recent Error Messages
	ModelInf	KL F8		Display Model Name
	Software	Software	V1.08	Software Version (Greater than or Equal to)
Test	Reset.M	Zoom		Reset Zoom Motor
	ManCtrl	Dimmer	**000** - 255	Manual Control Functions
		Strobe	000 - **255**	
		Zoom	**000** - 255	
	Caibrat	Password	PIN= **050**	Calibration

DIMMER CURVE MODES - Dim Curve

Select desired DIMMER MODE (**Standard**, Stage, TV, Architectural, Theatre, Stage2).
STAGE 2 DIMMING CURVE MODE ADDED WITH SOFTWARE UPDATE VERSION ≥1.07

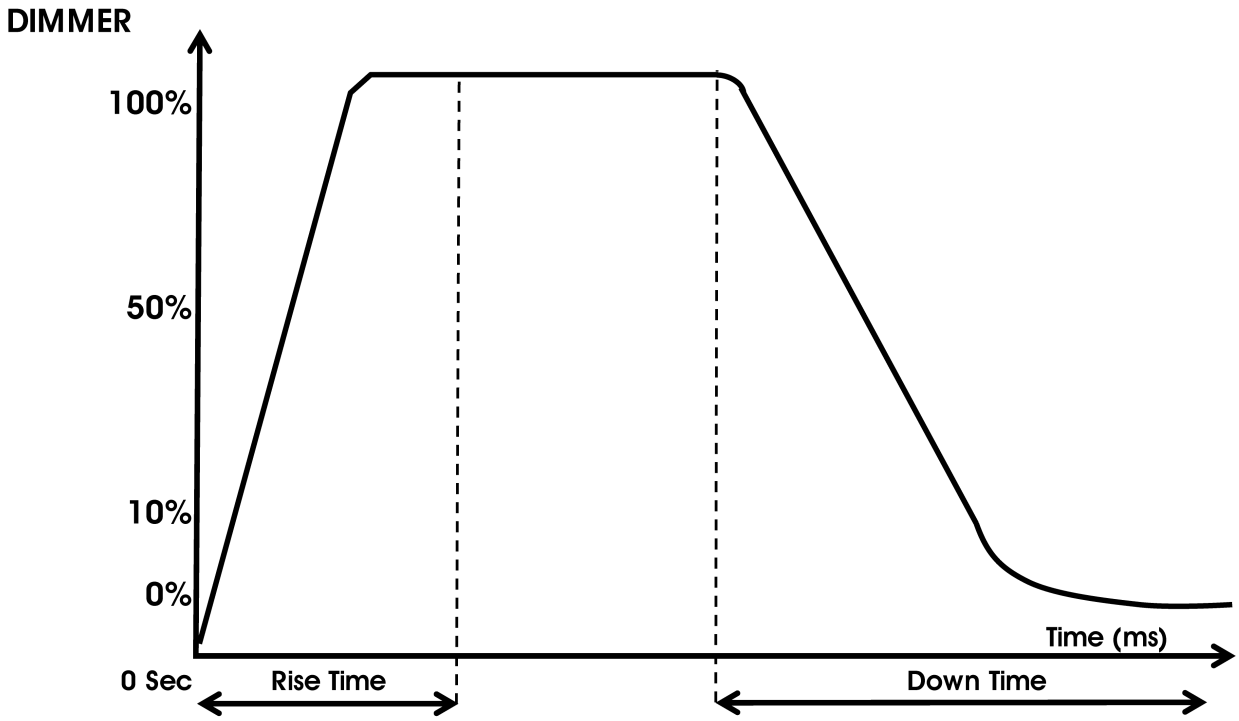

Dimming Curve Ramp Effect	0 sec Fade Time		1 sec Fade Time	
	0 — 255		0 — 255	
	Rise Time (ms)	Down Time (ms)	Rise Time (ms)	Down Time (ms)
Standard (default)	0	0	0	0
Stage	780	1100	1540	1660
TV	1180	1520	1860	1940
Architectural	1380	1730	2040	2120
Theatre	1580	1940	2230	2280
Stage 2	0	1100	0	1660

MANUAL DIMMING AND ZOOM CONTROL

FEATURE IS DISABLED WHEN DMX INPUT CABLE IS CONNECTED TO FIXTURE!
TO USE DIMMING AND ZOOM KNOBS, DISCONNECT DMX CABLE IF CONNECTED.

Follow steps below to enable manual DIMMING and ZOOM control knobs.

1. Access fixture system menu navigating to **Test** menu then access **ManCtrl** sub menu.

MAIN MENU	SUB MENU	OPTIONS / VALUES (Default Settings in **BOLD**)		DESCRIPTION
Test	Reset.M	Zoom		Reset Zoom Motor
	ManCtrl	Dimmer, Zoom, **Strobe**		Manual Control Functions
	Calibrat	PassWord	Password=**050**	Calibrate Zoom Motor **(PSWD Required to Access)**
		Zoom	000-255	

NOTE: To access the LCD Menu Control Display when locked/OFF, press and hold the **MODE** button for 3 seconds.

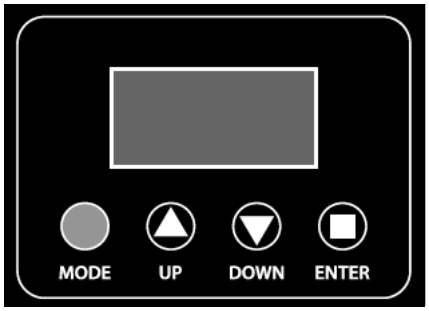

2. Select **Stobe** menu, set to value of **255 (LED ON)**, then exit fixture system menu.
3. Push **DIMMING** knob to unlock, rotate to desired level, push knob again to lock. Repeat this process each time a dimmer adjustment is desired.
4. Push **ZOOM** knob to unlock, rotate to desired level, push knob in again to lock. Repeat this process each time a dimmer adjustment is desired.

LCD DISPLAY

DMX CABLE CONNECTED

NO DMX CABLE CONNECTED

DMX CHANNEL FUNCTIONS AND VALUES

ELATION KL FRESNEL 8 DMX Channel Values / Functions (6 DMX Channels)					
Supports Software Versions: ≥ 1.02					
Features subject to change without notice.					
MODE / CHANNEL				**VALUE**	**FUNCTION**
2CH	**3CH**	**4CH**	**6CH**		
1	1	1	1		DIMMER INTENSITY
				000-255	Dimmer 0 to 100%
			2		DIMMER INTENSITY FINE
				000-255	Dimmer FINE Adjustment
	2	2	3		SHUTTER, STROBE
				000-031	LED OFF
				032-063	LED ON
				064-095	Strobe Effect SLOW to FAST
				096-127	LED ON
				128-159	Pulse Effect In Sequences
				160-191	LED ON
				192-223	Random Strobe Effect SLOW to FAST
				224-255	LED ON
2	3	3	4		ZOOM
				000-255	Zoom Adjustment from Min to Max
			5		ZOOM FINE
				000-255	Zoom FINE Adjustment
		4	6		DIMMER MODES
				000-020	Standard
				021-040	Stage
				041-060	TV
				061-080	Architectural
				081-100	Theatre
				101-255	Default to Setting on Fixture

DMX CHANNEL UPDATE WITH SOFTWARE UPDATE VERSION ≥1.07 See highlighted items below which have been updated with this software update.							
MODE / CHANNEL						VALUE	FUNCTION
2CH	3CH	2-3CH	4CH	2-4CH	6CH		
1	1	1	1	1	1		DIMMER INTENSITY
						000-255	Dimmer 0 to 100%
		2		2	2		DIMMER INTENSITY FINE
						000-255	Dimmer FINE Adjustment
	2		2		3		SHUTTER, STROBE
						000-031	LED OFF
						032-063	LED ON
						064-095	Strobe Effect SLOW to FAST
						096-127	LED ON
						128-159	Pulse Effect In Sequences
						160-191	LED ON
						192-223	Random Strobe Effect SLOW to FAST
						224-255	LED ON
2	3	3	3	3	4		ZOOM
						000-255	Zoom Adjustment from Min to Max
					5		ZOOM FINE
						000-255	Zoom FINE Adjustment
			4	4	6		DIMMER MODES
						000-020	Standard
						021-040	Stage
						041-060	TV
						061-080	Architectural
						081-100	Theatre
						101-120	Stage 2
						121-255	Default to Setting on Fixture

DMX CHANNEL UPDATE WITH SOFTWARE UPDATE VERSION ≥1.08

ELATION KL FRESNEL 8 DMX Channel Values / Functions (7 DMX Channels)						
Supports Software Versions: ≥ 1.08						
Features subject to change without notice.						
MODE / CHANNEL					**VALUE**	**FUNCTION**
Dimmer	**Dimmer 16bit**	**3CH**	**Standard**	**Extended**		
1	1	1	1	1		DIMMER INTENSITY
					000-255	Dimmer 0 to 100%
	2		2	2		DIMMER INTENSITY FINE
					000-255	Dimmer FINE Adjustment
		2	3	3		SHUTTER | STROBE
					000-031	LED OFF
					032-063	LED ON
					064-095	Strobe Effect SLOW to FAST
					096-127	LED ON
					128-159	Pulse Effect In SLOW to FAST
					160-191	LED ON
					192-223	Random Strobe Effect SLOW to FAST
					224-255	LED ON
2	3	3	4	4		MOTORIZED ZOOM
					000-255	ZOOM Adjustment from SMALL to BIG
			5	5		MOTORIZED ZOOM FINE
					000-255	ZOOM FINE Adjustment
			6	6		DIMMER MODES | DIMMER DELAY TIMES
					000-020	Standard
					021-040	Stage
					041-060	TV
					061-080	Architectural
					081-100	Theatre
					101-120	Stage 2
					121	Dimmer Delay Time 0.0 seconds
					122	Dimmer Delay Time 0.1 seconds
					123	Dimmer Delay Time 0.2 seconds
					124	Dimmer Delay Time 0.3 seconds
					125	Dimmer Delay Time 0.4 seconds
					126	Dimmer Delay Time 0.5 seconds
					127	Dimmer Delay Time 0.6 seconds
					128	Dimmer Delay Time 0.7 seconds
					129	Dimmer Delay Time 0.8 seconds
					130	Dimmer Delay Time 0.9 seconds
					131	Dimmer Delay Time 1.0 seconds
					132	Dimmer Delay Time 1.5 seconds
					133	Dimmer Delay Time 2.0 seconds
					134	Dimmer Delay Time 3.0 seconds
					135	Dimmer Delay Time 4.0 seconds
					136	Dimmer Delay Time 5.0 seconds
					137	Dimmer Delay Time 6.0 seconds
					138	Dimmer Delay Time 7.0 seconds
					139	Dimmer Delay Time 8.0 seconds
					140	Dimmer Delay Time 9.0 seconds
					141	Dimmer Delay Time 10.0 seconds
					142-255	Default

MODE / CHANNEL					VALUE	FUNCTION
Dimmer	Dimmer 16bit	3CH	Standard	Extended		
						LED REFRESH RATE | DIMMER CURVES** Hold selected DMX value for 5 seconds to engage.
					000-100	IDLE
					101-105	900 kHz
					106-110	1000 kHz
					111-115	1100 kHz
					116-120	1200 kHz
					121-125	1300 kHz
					126-130	1400 kHz
					131-135	1500 kHz
					136-140	2500 kHz
				7	141-145	4000 kHz
					146-150	5000 kHz
					151-155	10,000 kHz
					156-160	15,000 kHz
					161-165	20,000 kHz
					166-170	25,000 kHz
					171-200	IDLE
					201-210	DIMMER CURVE LINEAR (DEFAULT)
					211-220	DIMMER CURVE SQUARE
					221-230	DIMMER CURVE INVERSE SQUARE
					231-240	DIMMER CURVE S-CURVE
					241-255	IDLE

S P E C I F I C A T I O N S

SOURCE
350W >96CRI 3,000K Warm White LED
50,000 Hour Average LED Life*
*May vary depending on several factors including but not limited to:
Environmental Conditions, Power/Voltage, Usage Patterns (On-Off Cycling), Control and Dimming.

PHOTOMETRIC DATA
14,000+ Total Lumen Output
43,673 LUX 4,057 FC @6.6' (2m) (Min Zoom / Full ON)
4,169 LUX 387 FC @6.6' (2m) (Max Zoom / Full ON)
Zoom Range 11° - 57°
Beam Angle 10.8° - 56.8°
Field Angle 16.6° - 75.5°

EFFECTS
Motorized Zoom
Electronic Dimmer and Strobe
Variable 16-bit Dimming Modes and Curves

COLOR
Warm White 3,000K

CONTROL / CONNECTIONS
Manual and DMX Controlled Dimmer, Shutter and Zoom
Dimmer and Zoom Rotary Dials
(5) DMX Channel Modes (2 / 3 / 3 / 6 / 7)
4 Button Control Panel LCD Menu Display
RDM (Remote Device Management)
3/5pin DMX and IP65 Locking Power Cable In/Out
With Wired Digital Communication Network

SIZE / WEIGHT
Length: 23.95" (608.4mm)
Width: 12.89" (327.5mm)
Vertical Height: 17.95" (456mm)
Weight: 28.0 lbs. (12.7kg)

ELECTRICAL / THERMAL
AC 100-240V - 50/60Hz
430W Max Power Consumption
5°F to 113°F (-15°C to 45°C)
Power Linking: 3Pcs @ 110V / 6Pcs @ 240V

INCLUDED ITEMS
Gel Frame and Rotating Barn Doors
IP65 Locking Power Cable

APPROVALS / RATINGS
CE | cETLus | IP20

Specifications and improvements in the design of this unit and this manual are subject to change without any prior written notice.

FCC STATEMENT

This device complies with Part 15 of the FCC Rules. Operation is subject to the following two conditions: (1) this device may not cause harmful interference, and (2) this device must accept any interference received, including interference that may cause undesired operation.

FCC RADIO FREQUENCY INTERFERENCE WARNINGS & INSTRUCTIONS

This product has been tested and found to comply with the limits as per Part 15 of the FCC Rules. These limits are designed to provide reasonable protection against harmful interference in a residential installation. This device uses and can radiate radio frequency energy and, if not installed and used in accordance with the included instructions, may cause harmful interference to radio communications. However, there is no guarantee that interference will not occur in a particular installation. If this device does cause harmful interference to radio or television reception, which can be determined by turning the device off and on, the user is encouraged to try to correct the interference by one or more of the following methods:

- Reorient or relocate the device.
- Increase the separation between the device and the receiver.
- Connect the device to an electrical outlet on a circuit different from which the radio receiver is connected.
- Consult the dealer or an experienced radio/TV technician for help.

DIMENSIONAL DRAWINGS

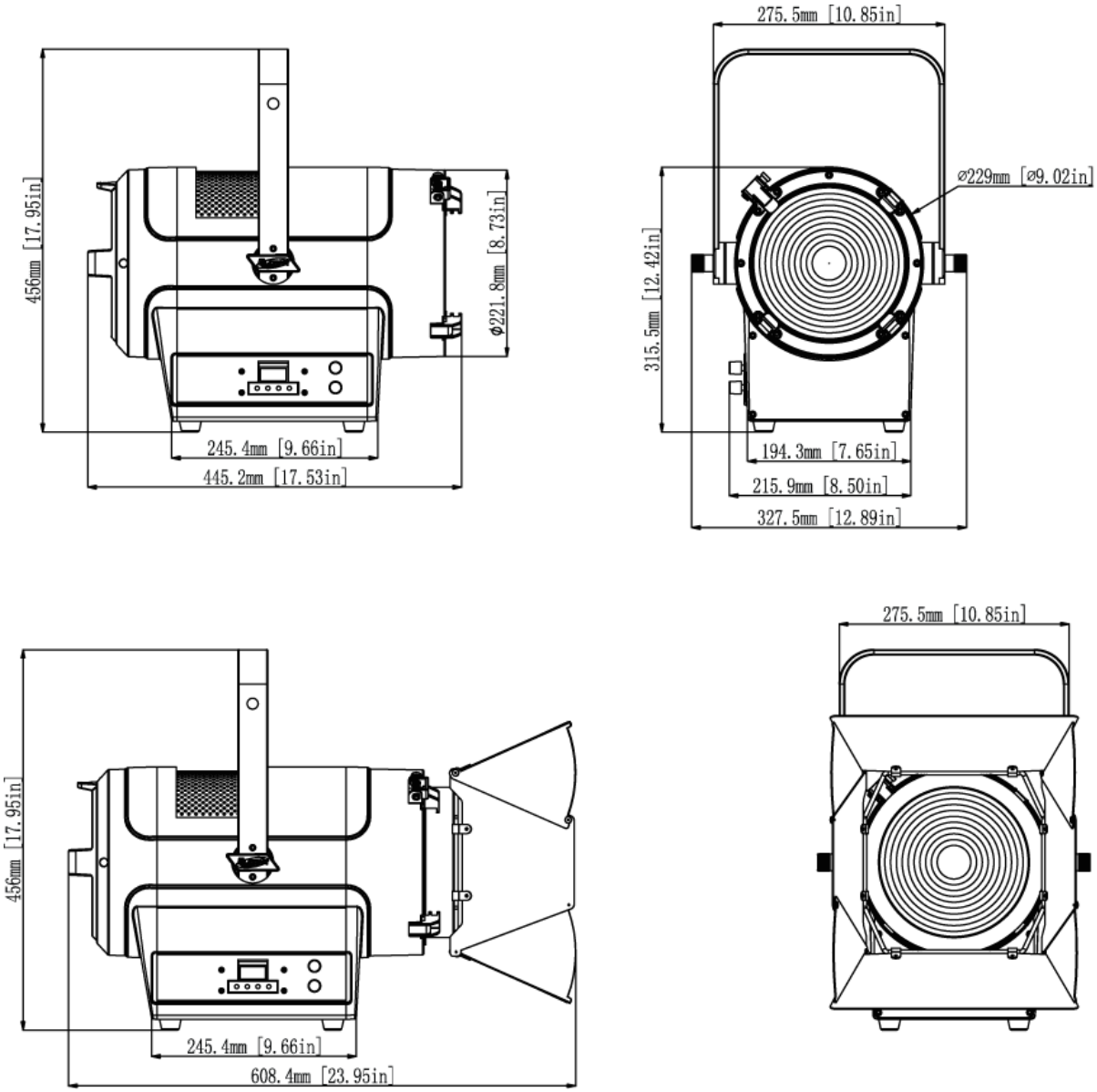

Specifications and improvements in the design of this unit and this manual are subject to change without any prior written notice.

OPTIONAL ACCESSORIES

ORDER CODE	ITEM
QUICK RIG CLAMP	Low Profile Quick Release Clamp
AC3PDMX5PRO	5 ft. (1.5m) 3pin PRO DMX Cable
AC5PDMX5PRO	5 ft. (1.5m) 5pin PRO DMX Cable
NEU088	3 ft. (1m) Power Link Cable
	Additional Cable Lengths Available